# NX-OS and Cisco Nexus Switching

## Next-Generation Data Center Architectures

Second Edition

Ron Fuller, CCIE® No. 5851
David Jansen, CCIE® No. 5952
Matthew McPherson

ciscopress.com

FREE SAMPLE CHAPTER

SHARE WITH OTHERS

# NX-OS and Cisco Nexus Switching

## Next-Generation Data Center Architectures

Second Edition

Ron Fuller, David Jansen,
Matthew McPherson

**Cisco Press**

800 East 96th Street

Indianapolis, IN 46240

# NX-OS and Cisco Nexus Switching

## Next-Generation Data Center Architectures, Second Edition

Copyright © 2013 Cisco Systems, Inc.

Published by:
Cisco Press
800 East 96th Street
Indianapolis, IN 46240 USA

All rights reserved. No part of this book may be reproduced or transmitted in any form or by any means, electronic or mechanical, including photocopying, recording, or by any information storage and retrieval system, without written permission from the publisher, except for the inclusion of brief quotations in a review.

Fourth Printing: June 2015

Library of Congress Cataloging-in-Publication data is on file.

ISBN-13: 978-1-58714-304-5
ISBN-10: 1-58714-304-6

## Warning and Disclaimer

This book is designed to provide information about the Nexus Operating system and Nexus family of products. Every effort has been made to make this book as complete and as accurate as possible, but no warranty or fitness is implied.

The information is provided on an “as is” basis. The authors, Cisco Press, and Cisco Systems, Inc., shall have neither liability nor responsibility to any person or entity with respect to any loss or damages arising from the information contained in this book or from the use of the discs or programs that may accompany it.

The opinions expressed in this book belong to the author and are not necessarily those of Cisco Systems, Inc.

## Trademark Acknowledgments

All terms mentioned in this book that are known to be trademarks or service marks have been appropriately capitalized. Cisco Press or Cisco Systems, Inc. cannot attest to the accuracy of this information. Use of a term in this book should not be regarded as affecting the validity of any trademark or service mark.

## Corporate and Government Sales

The publisher offers excellent discounts on this book when ordered in quantity for bulk purchases or special sales, which may include electronic versions and/or custom covers and content particular to your business, training goals, marketing focus, and branding interests. For more information, please contact: U.S. Corporate and Government Sales 1-800-382-3419 corpsales@pearsontechgroup.com

For sales outside of the U.S. please contact: International Sales international@pearsoned.com

## Feedback Information

At Cisco Press, our goal is to create in-depth technical books of the highest quality and value. Each book is crafted with care and precision, undergoing rigorous development that involves the unique expertise of members from the professional technical community.

Readers' feedback is a natural continuation of this process. If you have any comments regarding how we could improve the quality of this book, or otherwise alter it to better suit your needs, you can contact us through e-mail at feedback@ciscopress.com. Please make sure to include the book title and ISBN in your message.

We greatly appreciate your assistance.

**Publisher:** Paul Boger

**Associate Publisher:** Dave Dusthimer

**Development Editor:** Eleanor C. Bru

**Managing Editor:** Sandra Schroeder

**Project Editor:** Seth Kerney

**Editorial Assistant:** Vanessa Evans

**Cover Designer:** Gary Adair

**Book Designer:** Louisa Adair

**Business Operation Manager, Cisco Press:** Anand Sundaram

**Executive Editor:** Brett Bartow

**Copy Editor:** Apostrophe Editing Services

**Technical Editors:** Jeff Fry, Chad Hintz

**Proofreader:** Megan Wade

**Indexer:** Ken Johnson

**Composition:** Jake McFarland

Americas Headquarters
Cisco Systems, Inc.
San Jose, CA

Asia Pacific Headquarters
Cisco Systems (USA) Pte. Ltd.
Singapore

Europe Headquarters
Cisco Systems International BV
Amsterdam, The Netherlands

Cisco has more than 200 offices worldwide. Addresses, phone numbers, and fax numbers are listed on the Cisco Website at **www.cisco.com/go/offices.**

CCDE, CCENT, Cisco Eos, Cisco HealthPresence, the Cisco logo, Cisco Lumin, Cisco Nexus, Cisco StadiumVision, Cisco TelePresence, Cisco WebEx, DCE, and Welcome to the Human Network are trademarks; Changing the Way We Work, Live, Play, and Learn and Cisco Store are service marks; and Access Registrar, Aironet, AsyncOS, Bringing the Meeting To You, Catalyst, CCDA, CCDP, CCIE, CCIP, CCNA, CCNP, CCSP, CCVP, Cisco, the Cisco Certified Internetwork Expert logo, Cisco IOS, Cisco Press, Cisco Systems, Cisco Systems Capital, the Cisco Systems logo, Cisco Unity, Collaboration Without Limitation, EtherFast, EtherSwitch, Event Center, Fast Step, Follow Me Browsing, FormShare, GigaDrive, HomeLink, Internet Quotient, IOS, iPhone, iQuick Study, IronPort, the IronPort logo, LightStream, Linksys, MediaTone, MeetingPlace, MeetingPlace Chime Sound, MGX, Networkers, Networking Academy, Network Registrar, PCNow, PIX, PowerPanels, ProConnect, ScriptShare, SenderBase, SMARTnet, Spectrum Expert, StackWise, The Fastest Way to Increase Your Internet Quotient, TransPath, WebEx, and the WebEx logo are registered trademarks of Cisco Systems, Inc. and/or its affiliates in the United States and certain other countries.

All other trademarks mentioned in this document or website are the property of their respective owners. The use of the word partner does not imply a partnership relationship between Cisco and any other company. (0812R)

## About the Authors

**Ron Fuller**, CCIE No. 5851 (Routing and Switching/Storage Networking), is a technical marketing engineer (TME) on the Nexus 7000 team for Cisco. He has 21 years of experience in the industry and has held certifications from Novell, HP, Microsoft, ISC2, SNIA, and Cisco. His focus is working with customers worldwide to address their challenges with comprehensive end-to-end data center architectures and how they can best use Cisco technology to their advantage. He has had the opportunity to speak at Cisco Live on VDCs, NX-OS Multicast, and general design. He lives in Ohio with his wife and four wonderful children and enjoys travel and auto racing. He can be found on Twitter @ccie5851.

**David Jansen**, CCIE No. 5952, is a technical solutions architect for Data Center for Enterprise Central Area. David has more than 20 years' experience in the information technology industry. He has held multiple certifications from Microsoft, Novell, Checkpoint, and Cisco. His focus is to work with Enterprise customers to address end-to-end data center Enterprise architectures. David has been with Cisco for 15 years, has been working as a technical solutions architect for 6 years, and has provided unique experiences helping customers build architectures for Enterprise data centers. David has also been instrumental in developing and delivering the following Cisco Live presentations:

- Data Center Interconnect solutions to address L2 requirements between multiple data centers to meet application clusters and virtualization requirements (for the past five years)
- Next-generation data center architectures and operations tectorial and breakout sessions (for the past three years)
- Deploying NX-OS Nexus devices in the network infrastructure best practices

David holds a B.S.E. degree in computer science from the University of Michigan (Go Blue!) and an M.A. degree in adult education from Central Michigan University.

**Matthew McPherson** is a senior systems engineer and solutions architect for Cisco in the Central Select Operation, specializing in data center architectures. Matt has been with Cisco for more than 2 1/2 years and has more than 12 years of experience in the industry working for service providers and large enterprise customers in the financial and manufacturing verticals. He has held certifications from Juniper, Netscreen, and Cisco, and possesses a deep technical background in the areas of routing, switching, and security. His primary focus is working with strategic customers in greater Michigan to address their overall infrastructure challenges. He lives in Michigan with his wife and enjoys biking and collecting cars.

## About the Technical Reviewers

**Jeff Fry**, CCIE No. 22061 (Routing and Switching), is a senior network engineer and data center architect for a large data center hosting company in the United States. Prior to working at the hosting company, Jeff designed and oversaw a globally diversified data center and call center network in a large call center environment. Jeff has designed and implemented several Cisco data center networks using the Catalyst 6500 and Nexus 7000, 5000, and 2000 devices. Jeff has more than 20 years of experience in the industry and has certifications from Microsoft, CompTIA, Novell, and Cisco. Jeff lives in Pennsylvania with his wife and their three sons, and they enjoy vacationing at Disney World. Jeff can be found on twitter at @fryguy_pa.

**Chad Hintz**, CCIE No. 15729, is a technical solutions architect for Cisco focusing on designing enterprise solutions for customers around Cisco data center technologies. He also holds three CCIEs in routing and switching, security, and storage. He has more than 10 years of experience in the industry and has held certifications from Novell, VMware, and Cisco. His focus is working with enterprise/commercial customers to address their challenges with comprehensive end-to-end data center architectures. Chad is a regular speaker at Cisco and industry conferences for data center technologies. Chad lives near Buffalo, New York, with his wife and two wonderful children.

## Dedications

**Ron Fuller:** This book is dedicated to my loving wife Julie and my awesome children: Max, Sydney, Veronica, Emerson, and Wu. Thank you for showing me the world through your perspective and helping me appreciate the true joy of children. I can't thank you enough for believing in me when I told you I was going to write another book. Your support and encouragement has and always will be the key to any success I enjoy. Thank you for your love and support. I can't forget to acknowledge my parents, Gene and Joan. Your guidance and upbringing are what showed me what commitment and "getting it done right the first time" were all about. I've tried to make good use of my spare time and use my God-given gifts correctly.

**David Jansen:** This book is dedicated, again, to my loving wife Jenise and my three children: Kaitlyn, Joshua, and Jacob. You are the inspiration that gave me the dedication and determination to complete this project. Kaitlyn, Joshua, Jacob, you are three amazing kids; you are learning the skills to be the best at what you do and accomplish anything; keep up the great work. Thank you for all your love and support; I could not have completed (yet another) this without your help, support, and understanding. I also promise you that I am not going to take on another commitment like this for a long time; I promise. Second, I would also like to further dedicate this book to my parents, Michael and Dolores; you have given me proper tools, guidance, attitude, drive, and education to allow me to do what I do. I'm so grateful to God, who gives endurance, encouragement, and motivation to complete such a large project like this.

**Matthew McPherson:** This book is dedicated to my wonderful wife Carey who is the love of my life! Without your strength, support, and encouragement, I would never have been able to complete this project. I would also like to further dedicate this book to my parents, Steve and Kathy. Without your guidance and wisdom growing up, I would never have had the opportunity to write this book. Thank you both for always making me strive for greatness.

# Acknowledgments

**Ron Fuller:** First, I'd like to thank my co-authors Dave Jansen and Matt McPherson. Dave, thank you for being such a good friend, a trusted co-worker, and a leader in our organization. You set the bar the rest of us try to reach. It has been great sharing a brain with you, and I look forward to more challenges and fun. Keep the goat rodeos coming! Matt, thank you for stepping in to help complete this project. You are awesome to work with, and your technical acumen is top-notch. People like you and Dave are the reason I love my job. We need to find some more concerts to go to, but hopefully I won't have to walk so far in the cold.

I'd like to thank Brett Bartow for his (almost) infinite patience with this project. It is a huge undertaking, and his persistence, understanding, and encouragement were greatly appreciated. You gave us the extra time we needed to make sure this was a fantastic and comprehensive second edition.

Chris Cleveland, it has been a pleasure working with you. Your guidance on the formatting and consistency makes the book something we all can be proud of. Thank you for making three propeller heads from Cisco look good.

To our technical editors, Jeff Fry and Chad Hintz: Thank you for the detail-oriented work and assistance making the book accurate and concise.

I'd like to thank my team, in particular Nikhil Kelshikar and Jeff Raymond, for giving me the time needed to complete this project. The rest of the TMEs, thank you for explaining some of these topics, some more than once, so I could make sure this book is accurate.

A special thanks to Lucien Avramov for the Python script example used in Chapter 7. I also appreciate the help getting around Moscow—my Russian isn't very good.

To my family, thank you for the time away from you while I worked on a book on a topic on things you don't get to see. Your understanding and support through the weekends and late nights are truly appreciated.

Finally, I want to thank God for the gifts he has given me and the opportunity to do what I love to do with people I enjoy to support my family. I couldn't ask for more.

**David Jansen:** This is my third book, and it has been a tremendous honor to work with the great people at Cisco Press. There are so many people to thank; I'm not sure where to begin. I'll start with Brett Bartow: Thank you for allowing me to publish another book; this is something I enjoy doing. As we are a year late on this, I appreciate your patience and tolerance on this project. I really appreciate you keeping me on track to complete the project in a timely manner, as we have missed several completion dates.

First, I would like to thank my friends and co-authors Ron Fuller and Matthew McPherson. Both of you guys are great friends and co-workers that ROCK. I can't think of two better people to work with to complete such a project. Cisco is one of the most amazing places I've ever worked, and it's people like you, who are wicked smart and a lot of fun to work with, that make it such a great place. I look forward to working on other projects in the future. I look forward to continuing to work with you and grow the

friendship into the future. We need to find another heavy concert to top the Megadeth one we went to together the winter of 2011; Brett, this is why we were a year late on the project ☺.

I want to thank Kevin Corbin for your contributions to the second editions. Thank you for being a great friend and peer co-worker.

Chris Cleveland, again it was a pleasure to work with you. Your expertise, professionalism, and follow-up as a development editor is unsurpassed; thank you for your hard work and quick turnaround; this helped to meet the deadlines set forth.

To our technical editors—Jeff Fry and Chad Hintz—thank you for the time, sharp eyes, and excellent comments/feedback; both of you created a ton more work for me just when I thought I was done. It was a pleasure having you as part of the team. I would like to thank Yuri Lukin for allowing me access to his lab to complete the Nexus 1000V chapter and all the services. Yuri you are a true professional; thank you for your time and expertise.

Thanks to my manager at Cisco, Robert Fisher—I appreciate your guidance and your trust in my ability to juggle the many work tasks along with extra projects like working on a book. Thank you for all your support Bob!

I would like to thank the heavy metal music world out there—it allowed me to stay focused when burning the midnight oil; I would not have been able to complete this without loud rock 'n roll music. Thank you.

I want to thank my family for their support and understanding while I was working on this project late at night and being patient with me when my lack of rest may have made me a little less than pleasant to be around. I know it is also hard to sleep when Dad is downstairs writing and not realizing the db levels of the music while the rest of the family sleeps.

Most important, I would like to thank God for giving me the ability to complete such a task with dedication and determination and for providing me the skills, knowledge, and health needed to be successful in such a demanding profession.

**Matthew McPherson**: I'd like to thank both David and Ron for asking me to be a part of such an amazing opportunity. Dave, thank you again for being such an awesome friend and great mentor. You are a technical rock star who is always there to help in any situation, and for that reason I have the utmost respect for you. I cannot thank you enough your continued guidance and wisdom. Ron, you have become a great friend, and it's been a privilege to work more closely with you. I look forward to our continued friendship and am eagerly awaiting the next laser-sword match! It is so amazing to be at Cisco and have an opportunity to work with such amazing people!

Brett Bartow and Chris Cleveland, thank you both for your patience and support through my first publication. It has certainly been a privilege working with you both, and I look forward to starting on the third edition!

Chad Hintz and Jeff Fry, it has been great working with you both. Thank you for your time, attention to detail, and technical knowledge that have helped shape this book.

Gary Witt, thank you for stepping up to mentor me when I joined Cisco. You are such a great leader, and I certainly appreciate your insight and encouragement. I look forward to continuing our conversations and learning as much as I can.

I'd also like to thank my manager, Rajeev Grover. Your guidance and support for this project are truly appreciated!

# Contents at a Glance

Foreword xxiii

Introduction xxiv

Chapter 1 Introduction to Cisco NX-OS 1

Chapter 2 Layer 2 Support and Configurations 59

Chapter 3 Layer 3 Support and Configurations 135

Chapter 4 IP Multicast Configuration 221

Chapter 5 Security 255

Chapter 6 High Availability 349

Chapter 7 Embedded Serviceability Features 385

Chapter 8 Unified Fabric 455

Chapter 9 Nexus 1000V 489

Chapter 10 Quality of Service (QoS) 643

Chapter 11 Overlay Transport Virtualization (OTV) 675

Chapter 12 Layer 3 Virtualization and Multiprotocol Label Switching (MPLS) 709

Chapter 13 LISP 729

Chapter 14 Nexus Migration Case Study 749

Index 789

# Contents

**Foreword xxiii**

**Introduction xxiv**

**Chapter 1 Introduction to Cisco NX-OS 1**

NX-OS Overview 1

NX-OS Supported Platforms 3

NX-OS Licensing 7

*Nexus 7000 7*

*Nexus 5500 8*

*Nexus 3000 8*

*Nexus 2000 9*

*Nexus 1000v 9*

*Installing the NX-OS License File 9*

Cisco NX-OS and Cisco IOS Comparison 10

NX-OS User Modes 12

EXEC Command Mode 12

Global Configuration Command Mode 13

Interface Configuration Command Mode 13

Management Interfaces 14

Controller Processor (Supervisor Module) 15

Connectivity Management Processor (CMP) 16

Telnet 18

SSH 19

SNMP 23

DCNM 26

Managing System Files 28

File Systems 28

Configuration Files: Configuration Rollback 33

Operating System Files 35

Virtual Device Contexts 37

VDC Configuration 43

VDC Interface Allocation 46

*Interface Allocation: N7K-M132XP-12 and L 46*

*Interface Allocation: N7K-F132XP-15 47*

*Interface Allocation: N7K-M108X2-12L 48*

*Interface Allocation: 10/100/1000 Modules 48*
*Interface Allocation on M2 Modules 52*
Troubleshooting 54
show Commands 54
debug Commands 55
Topology 56
Further Reading 57

**Chapter 2 Layer 2 Support and Configurations 59**
Layer 2 Overview 59
Store-and-Forward Switching 60
Cut-Through Switching 60
Fabric Extension via the Nexus 2000 60
Configuring Nexus 2000 Using Static Pinning 61
Nexus 2000 Static Pinning Verification 62
Configuring Nexus 2000 Using Port-Channels 66
Nexus 2000 Static Pinning Verification 67
Layer 2 Forwarding on a Nexus 7000 69
L2 Forwarding Verification 70
VLANs 71
Configuring VLANs 72
VLAN Trunking Protocol 72
Assigning VLAN Membership 73
Verifying VLAN Configuration 74
Private VLANs 76
Configuring PVLANs 77
Verifying PVLAN Configuration 80
Spanning Tree Protocol 80
Rapid-PVST+ Configuration 82
*Verifying Spanning Tree State for a VLAN 83*
*Spanning Tree Timers 84*
MST Configuration 87
Additional Spanning Tree Configuration 91
*Port Cost 91*
*Port Priority 94*
Spanning Tree Toolkit 94
*BPDUGuard 94*

*BPDUFilter 95*
*RootGuard 96*
*LoopGuard 97*
*Dispute Mechanism 98*
*Bridge Assurance 98*
Spanning Tree Port Types 99
Virtualization Hosts 100
Configuring Layer 2 Interfaces 100
*Trunk Ports 100*
*Standard Host 101*
*Link to Virtualization Host 101*
*Port-Profiles 102*
Port-Channels 103
Assigning Physical Ports to a Port-Channel 104
Port-Channel Flow Control 107
Verifying Load Distribution Across a Port-Channel 108
Virtual Port-Channels 109
vPC Peer-Gateway 116
vPC Peer-Switch 116
ARP Synchronization 117
Unidirectional Link Detection 118
Cisco FabricPath 119
vPC+ 127
Configuring vPC+ 127
Summary 133

**Chapter 3 Layer 3 Support and Configurations 135**
EIGRP 135
EIGRP Operation 136
Configuring EIGRP 137
EIGRP Summarization 142
EIGRP Stub Routing 145
Securing EIGRP 147
EIGRP Redistribution 149
OSPF 154
OSPFv2 Configuration 154
OSPF Summarization 160

OSPF Stub Routing 163
Securing OSPF 167
OSPF Redistribution 169
OSPFv3 Configuration 177
IS-IS 178
IS-IS Configuration 178
BGP 183
BGP Configuration 184
BGP Neighbors 187
Securing BGP 190
BGP Peer Templates 192
Advertising BGP Networks 194
Modifying BGP Routing Metrics 197
Verifying BGP-Specific Configuration 198
First Hop Redundancy Protocols 198
HSRP 199
*HSRP Configuration 199*
*HSRP Priority and Preempt 200*
*Verifying the HSRP Configuration 201*
*Securing HSRP 202*
*HSRP Secondary Support 204*
*HSRP Support for IPv6 204*
VRRP 205
*VRRP Configuration 205*
*VRRP Priority and Preempt 207*
*Verifying VRRP Configuration 208*
*Securing VRRP 208*
*VRRP Secondary Support 209*
HSRP, VRRP, and vPC Interactions 210
GLBP 212
*GLBP Configuration 212*
*GLBP Priority and Preempt 214*
*Verifying GLBP Configuration 214*
*Securing GLBP 215*

*GLBP Secondary Support 218*
Summary 220

**Chapter 4 IP Multicast Configuration 221**
Multicast Operation 221
Multicast Distribution Trees 222
Reverse Path Forwarding 225
Protocol Independent Multicast (PIM) 225
RPs 226
PIM Configuration on Nexus 7000 and Nexus 5500 227
Configuring Static RPs 230
Configuring BSRs 232
Configuring Auto-RP 235
Configuring Anycast-RP 237
Configuring SSM and Static RPF 239
IGMP Operation 241
IGMP Configuration on Nexus 7000 242
IGMP Configuration on Nexus 5000 245
IGMP Configuration on Nexus 1000V 246
MSDP Configuration on Nexus 7000 248
Administrative Scoping of Multicast RPs in PIM 250
Configuring PIM Join and Prune Policies 252
Multicast and Control Plane Policing (CoPP) 253
Summary 253

**Chapter 5 Security 255**
Configuring RADIUS 256
RADIUS Configuration Distribution 259
Configuring TACACS+ 266
Enabling TACACS+ 266
*TACACS+ Configuration Distribution 267*
*Configuring the Global TACACS+ Keys 268*
*Configuring the TACACS+ Server Hosts 268*
*Configuring TACACS+ Server Groups 269*
*Configuring TACACS+ Source Interface 270*
Configuring SSH 275
Cisco TrustSec 278
Configuring AAA for Cisco TrustSec 281

*Defining Network Device Admission Control 282*
*Configuring the Nexus 7000 for 802.1x and SGA Features 285*
*SGT Assignment via ISE Server 288*
*Policy Component: IP to SGT Mapping 290*
*Policy Component: SGACL Creation 292*
Configuring Cisco TrustSec: IEEE 802.1AE LinkSec 294
Layer 2 Solutions Between Data Centers 301
Configuring IP ACLs 302
Configuring MAC ACLs 305
Configuring VLAN ACLs 307
Configuring Port Security 308
Security Violations and Actions 311
Configuring DHCP Snooping 313
Configuring Dynamic ARP Inspection 316
Dynamic ARP Inspection Trust State 317
Configuring IP Source Guard 321
Configuring Keychain Management 322
Configuring Traffic Storm Control 323
Configuring Unicast RPF 325
Configuring Control Plane Policing 327
Configuring Rate Limits 335
SNMPv3 340
Summary 347

**Chapter 6 High Availability 349**
Physical Redundancy 349
Redundant Power Supplies 350
Redundant Cooling System 352
Redundant Supervisors 355
Redundant Ethernet Out-of-Band (EOBC) 357
Redundant Fabric Modules 357
Generic Online Diagnostics 358
Bootup Diagnostics 359
Runtime Diagnostics 360
On-Demand Diagnostics 365

NX-OS High-Availability Architecture 365
Process Modularity 366
Process Restart 368
Stateful Switchover 369
Nonstop Forwarding 370
In-Service Software Upgrades 370
Summary 383

**Chapter 7 Embedded Serviceability Features 385**
SPAN 386
SPAN on Nexus 7000 386
Configuring SPAN on Nexus 7000 387
SPAN on Nexus 5x00 392
Configuring SPAN on Nexus 5x00 393
SPAN on Nexus 1000V 397
Configuring SPAN on Nexus 1000V 398
ERSPAN on Nexus 1000V 400
ERSPAN on Nexus 7000 406
ERSPAN on Nexus 5x00 412
Embedded Analyzer 414
Smart Call Home 424
Smart Call Home Configuration 428
Configuration Checkpoint and Rollback on Nexus 7000 431
Checkpoint Creation and Rollback 432
Configuration Checkpoint and Rollback on Nexus 5x00 434
Checkpoint Creation and Rollback 435
NetFlow 437
Configuring NetFlow on Nexus 7000 438
Configuring NetFlow on Nexus 1000V 442
Network Time Protocol 444
Precision Time Protocol 445
IEEE 802.3az (Energy Efficient Ethernet) 447
Power On Auto-Provisioning 448
Python 449
Summary 454

**Chapter 8 Unified Fabric 455**

Unified Fabric Overview 455

Enabling Technologies 456

10-Gigabit Ethernet 456

Fibre Channel over Ethernet 458

Single-Hop Fibre Channel over Ethernet 461

Multhop Fibre Channel over Ethernet 462

Storage VDC on Nexus 7000 463

N-Port Virtualization 465

N-Port Identification Virtualization 466

FCoE NPV Mode 466

Nexus 5x00 Unified Fabric Configuration 467

Single-Hop FCoE Configuration: Nexus 5x00 469

FCoE-NPV on Nexus 5x00 473

Nexus 7000 Unified Fabric Configuration 477

Summary 488

**Chapter 9 Nexus 1000V 489**

Hypervisor and vSphere Introduction 489

Nexus 1000V System Overview 490

Nexus 1000V Switching Overview 494

Nexus 1000V VSM Installation 496

Nexus 1000V Deployed on Nexus 1010 Virtual Services Blade 497

*Registering the Nexus 1000V Plug-In to VMware Virtual Center Management Application 502*

*Configuring the SVS Domain and Networking Characteristics 507*

*Connecting the Nexus 1000V VSM to the vCenter Server 508*

Nexus 1000V Installation Management Center 510

VEM Installation Option on the Nexus 1000V Management Installation Center 519

vCenter Connection Option on the Nexus 1000V Management Installation Center 523

Creating the Uplink Profile 526

Adding the VEM to a ESX vSphere Host 528

Enabling the Telnet Server Process 536

Changing the VSM Hostname 536

Layer 3 Control 536
1000V Port Profiles 542
Virtual Network Management Center 552
Installing Virtual Network Management Center Software from OVA Downloaded from Cisco.com 553
Adding the VM-Manager for vCenter Connectivity in VNMC Management Application 564
Configuring the Cisco VNMC Policy-Agent on the 1000v VSM 570
Virtual Security Gateway 571
Install Virtual Security Gateway on the Nexus 1010 574
Configuring the Cisco VNMC Policy-Agent on the VSG 577
Verify That the VSG and VSM Are Registered Clients in VNMC 578
Creating a Tenant in VMMC 579
Virtual Extensible LAN 602
Deploying Virtual Extensible LAN 604
Nexus 1000v Network Analysis Module 629
Installing Nexus 1000v Network Analysis Module 630
Deploying the Nexus 1000v NAM as a Virtual Services Blade on the Nexus 1010 641
Summary 642

**Chapter 10 Quality of Service (QoS) 643**
QoS on Nexus 7000 646
Forwarding Architecture 646
Network-QoS Policies 648
Queuing Policies 650
QoS and Nexus 2000 Fabric Extenders 661
QoS and Nexus 7000 Virtual Device Contexts 663
QoS on Nexus 5x00 663
Forwarding Architecture 663
Network-QoS Policies 664
Queuing Policies 667
QoS and Nexus 2000 Fabric Extenders 668
QoS on Nexus 1000V 670
Forwarding Architecture 670
Classification in Nexus 1000V 670
Summary 674

**Chapter 11 Overlay Transport Virtualization (OTV) 675**

OTV Terminology and Concepts 677
OTV Control Plane 682
Multicast-Enabled Transport Infrastructure 687
Unicast-Enabled Transport Infrastructure 691
OTV Data-Plane 695
Data-Plane Multicast Traffic 697
OTV and QoS 698
Failure Isolation 698
STP Isolation 698
Unknown Unicast Handling with OTV 699
Broadcast Traffic Handling with OTV 699
Multihoming with OTV 700
OTV and ARP 700
First-Hop Routing Protocol Localization 702
Inbound Path Optimization 705
Summary 707

**Chapter 12 Layer 3 Virtualization and Multiprotocol Label Switching (MPLS) 709**

Virtual Routing and Forwarding 709
Predefined VRFs 710
VRF Operational Commands 713
VRF-Lite 713
MPLS Introduction 717
MPLS Terminology 718
LDP and Layer 3 VPNs 720
Quality of Service 723
Traffic Engineering 723
MPLS and IPv6: 6PE and 6VPE 725
Management and Troubleshooting 725
High Availability 725
Nexus Hardware Requirements and NX-OS Licensing for MPLS and VRF 726
Summary 727

**Chapter 13 LISP 729**

LISP Overview 729
LISP Terminology 730
LISP Prerequisites 731
LISP Control Plane 732
LISP Data Plane 733
Communicating Between LISP and non-LISP Sites 735
LISP Host Mobility with an Extended Subnet Mode 736
LISP Deployment Best Practices 746
Summary 746

**Chapter 14 Nexus Migration Case Study 749**

Existing Environment 749
Design Goals 750
The Design 751
Migration Plan 752
Premigration Steps 752
Maintenance Window #1 754
Maintenance Window #1 Summary 760
Maintenance Window #2 760
Ongoing Maintenance Windows 788
Summary 788

**Index 789**

## Icons Used in This Book

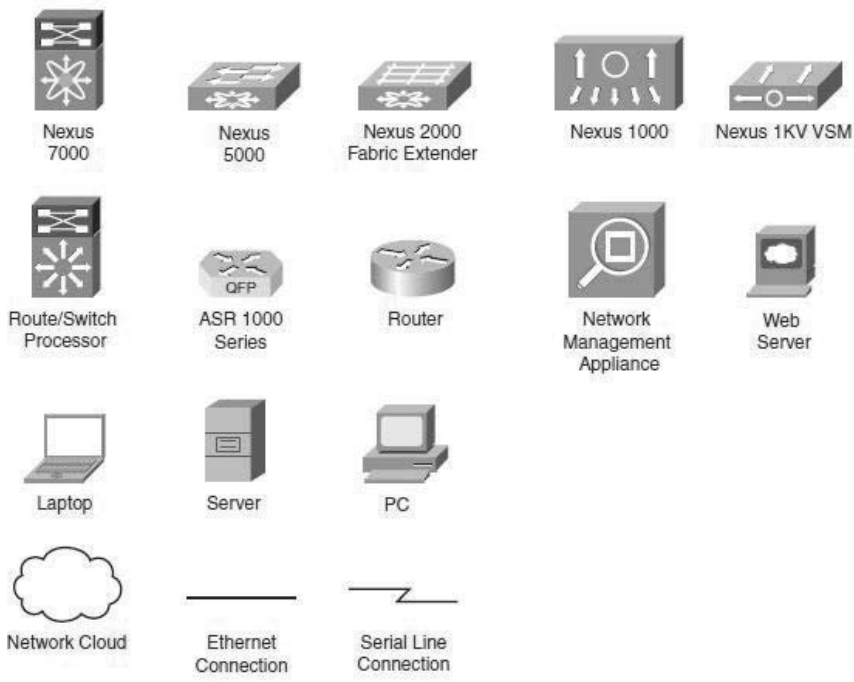


## Command Syntax Conventions

The conventions used to present command syntax in this book are the same conventions used in the IOS Command Reference. The Command Reference describes these conventions as follows:

- **Boldface** indicates commands and keywords that are entered literally as shown. In actual configuration examples and output (not general command syntax), boldface indicates commands that are manually input by the user (such as a **show** command).
- *Italic* indicates arguments for which you supply actual values.
- Vertical bars (|) separate alternative, mutually exclusive elements.
- Square brackets ([ ]) indicate an optional element.
- Braces ({ }) indicate a required choice.
- Braces within brackets ([{ }]) indicate a required choice within an optional element.

# Foreword

With more than 30,000 customers across every vertical, segment, and corner of the Earth, nobody can dispute that NX-OS is delivering on the requirements for the next-generation data center. In five quick years, seven product families have been released that are powered by NX-OS and provide end-to-end solutions in data centers large and small. These environments are as varied as ultra low latency trading environments, massively scalable data centers, cloud providers, and commercial and enterprise customer networks. NX-OS has the flexibility, reliability, security, and scalability to meet these demands and more.

The success of these products is driven by a team within Cisco that is committed to providing world-class solutions and solving challenges for customers with innovative technologies. Capabilities such as In-Service Software Upgrade (ISSU), modularity of the operating system, and stateful process restart lay a foundation for emerging technologies to build upon while preserving the investment in training and operations of the network. Game-changing capabilities such as Overlay Transport Virtualization (OTV), Locator Separator/ID Protocol (LISP), FabricPath, Fabric Extender architecture, vPath, Unified Ports, and dense 10G, 40G, and 100G interfaces provide customers a breadth of flexibility unparalleled in the industry—all running a common operating system, NX-OS.

To that end, a book like this can become a convenient reference for best practices deployment of these new technologies. It is written by two enterprise data center technology solutions architects and a technical marketing engineer on the Nexus 7000 team who all work with our customers on a daily basis and help them develop next-generation data center architectures. Their breadth of experience makes them perfect candidates to drive a project such as this.

We hope that as you read this book and learn more about the Nexus series of switches, and NX-OS specifically, you'll see the years of effort that made this product the Cisco flagship data center operating system now and in the years to come. Enjoy!

David Yen, SVP & GM
Data Center Business Unit
Cisco, San Jose

## Introduction

The modern data center is rapidly changing and evolving to support the current and future demands of technology. At the center of this change is the network—the single entity that connects everything and touches all components of the data center. With that in mind, Cisco has launched a new series of switches, Nexus, based on a revolutionary new operating system, NX-OS, to meet these changes and provide a platform with the scalability, reliability, and comprehensive feature set required in the next-generation data center.

The purpose of this book is to provide a guide for the network administrator who might not be familiar with Nexus and NX-OS. It is intended to be used as a "go-to" resource for concise information on the most commonly used aspects of NX-OS across the Nexus 7000, 5000, 5500, and 1000V platforms.

## Goals and Methods

The goal of this book is to provide best practice configurations to common internetworking scenarios involving Nexus products. Having been network administrators, the authors are conscious of the pressures and challenges with finding accurate and relevant information, especially on new technology. They intend this book to be a resource network administrators reach for first.

Although there might be more than one way to accomplish a networking requirement, this book focuses on the best way that minimizes operational complexity and maximizes supportability. The authors realize and respect that there might be corner-case scenarios that call for configurations not described in this book but sincerely hope they address the vast majority of common configurations.

## Who Should Read This Book?

This book is targeted for the network administrator, consultant, or student looking for assistance with NX-OS configuration. It covers the three major Cisco Nexus products and highlights key features of them in a way that makes it easy to digest and implement.

## How This Book Is Organized

This book has been organized following the OSI system model with the initial chapters starting with Layer 2 and then moving to Layer 3. Network-based services such as IP multicast, security, and high availability are then added. Next, the embedded serviceability features of NX-OS are explored, before moving to emerging data center architecture, Unified Fabric. With the drive toward virtualization, the need for increased visibility and control arises, and the Nexus 1000V meets these goals, which are covered next. Quality of service (QoS) is detailed before moving to the next topic, Overlay Transport Virtualization (OTV), where L2 segments can be safely extended between data centers.

The last chapter features a case study of an Enterprise customer who migrated from a Cisco Catalyst-based architecture to a Nexus-based one. The detailed step-by-step process is illustrated to provide a cookbook that can be used in many places.

Chapters 1 through 14 cover the following topics:

- **Chapter 1, "Introduction to Cisco NX-OS"**: Provides the reader with the foundation for building NX-OS configurations, including command-line interface (CLI) differences, virtualization capabilities, and basic file system management.
- **Chapter 2, "Layer 2 Support and Configurations"**: Focuses on the comprehensive suite of Layer 2 technologies supported by NX-OS, including vPC, Spanning Tree Protocol, and Cisco FabricPath.
- **Chapter 3, "Layer 3 Support and Configurations":** Delves into the three most-common network Layer 3 protocols, including EIGRP, OSPF, and BGP. In addition, HSRP, GLBP, and VRRP are discussed.
- **Chapter 4, "IP Multicast Configuration":** Provides the information needed to configure IP Multicast protocols such as PIM, Auto-RP, and MSDP.
- **Chapter 5, "Security":** Focuses on the rich set of security protocols available in NX-OS, including CTS, SGTs, ACLs, CoPP, DAI, and more.
- **Chapter 6, "High Availability":** Delves into the high-availability features built into NX-OS, including ISSU, stateful process restart, stateful switchover, and nonstop forwarding.
- **Chapter 7, "Embedded Serviceability Features":** Provides the ability to leverage the embedded serviceability components in NX-OS, including SPAN, ERSPAN, configuration checkpoints and rollback, packet analysis, Smart Call Home, NTP, Python, and PoAP.
- **Chapter 8, "Unified Fabric":** Explores the industry-leading capability for Nexus switches to unify storage and Ethernet fabrics with a focus on FCoE, NPV, and NPIV.
- **Chapter 9, "Nexus 1000V"**: Enables you to implement Nexus 1000V in a virtualized environment to maximum effect leveraging the VSM, VEM, and port profiles.
- **Chapter 10, "Quality of Service (QoS)"**: Illustrates the QoS capabilities of the Nexus platforms and covers the MQ CLI, queuing, and marking.
- **Chapter 11, "Overlay Transport Virtualization (OTV)"**: Delves into the details of this technology used to extend L2 networks across a L3 infrastructure.
- **Chapter 12, "Layer 3 Virtualization and Multiprotocol Label Switching (MPLS)"**: Covers how the integration of MPLS application components, including Layer 3 VPNs, traffic engineering, QoS, and mVPN-enable the development of highly efficient, scalable, and secure networks that guarantee service-level agreements.

- **Chapter 13, "LISP"**: Provides an introduction and overview of Locator ID Separation Protocol (LISP) in NX-OS and how this new routing architecture and paradigm shift decouples the server identity and the server location to allow for mobility, scalability, and security.
- **Chapter 14, "Nexus Migration Case Study"**: Detailed step-by-step description of a customer's implementation of Nexus technology in their data center and the migration from a Catalyst-based architecture.

Chapter 8

# Unified Fabric

This chapter covers the following topics:

- Unified Fabric overview
- Enabling technologies
- Nexus 5x00 Unified Fabric configuration
- Nexus 7000 Unified Fabric configuration
- Cisco MDS Unified Fabric configuration

The Nexus family of switches represents a revolutionary approach to I/O within the data center referred to as Unified Fabric.

## Unified Fabric Overview

One of the biggest trends in data centers today is consolidation, which can mean many different things. In some cases, consolidation refers to a physical consolidation of data centers where dozens or even hundreds of data centers are geographically dispersed and consolidated into a smaller number of large data centers. Consolidation can also exist within a data center where a large number of underutilized physical servers are consolidated, usually by leveraging some type of virtualization technology, into a smaller number of physical servers. Although virtualization offers many benefits, including consolidation of processors, memory, and storage, little is done to consolidate the amount of adapters, cables, and ports within the data center. In most virtualization implementations, there is actually a requirement for more adapters, cables, and ports to achieve the dense I/O requirements associated with virtualization. Data centers today contain multiple network fabrics that require discreet connectivity components to each fabric.

I/O consolidation is a trend within data centers that refers to the capability to aggregate connectivity to multiple fabrics into a single or redundant pair of adapters, cables, and

port. Although new technologies have emerged to enable this consolidation to occur, the concept is not new. Fibre Channel, iSCSI, Infiniband, and others were all introduced in an attempt to consolidate I/O. Although the merits or consolidation capabilities of each of these technologies might be open to debate, for one reason or another, all failed to reach mainstream adoption as the single fabric for all I/O requirements.

As a consolidation technology, Unified Fabric offers several benefits to customers, including

- **Lower capital expenditures:** Through the reduction of adapters, cables, and ports required within the infrastructure.
- **Lower operational expenses:** Through the reduction of adapters, cables, and ports drawing power within the data center.
- **Reduced deployment cycles:** Unified Fabric provides a wire-once model, in which all LAN, SAN, IPC, and management traffic is available to every server without requiring additional connectivity components.
- **Higher availability:** Quite simply, fewer adapters and ports means fewer components that could fail.

## Enabling Technologies

Ethernet represents an ideal candidate for I/O consolidation. Ethernet is a well-understood and widely deployed medium that has taken on many consolidation efforts already. Ethernet has been used to consolidate other transport technologies such as FDDI, Token Ring, ATM, and Frame Relay networking technologies. It is agnostic from an upper layer perspective in that IP, IPX, AppleTalk, and others have used Ethernet as transport. More recently, Ethernet and IP have been used to consolidate voice and data networks. From a financial aspect, there is a tremendous investment in Ethernet that also must be taken into account.

For all the positive characteristics of Ethernet, there are several drawbacks of looking to Ethernet as an I/O consolidation technology. Ethernet has traditionally not been a lossless transport and relied on other protocols to guarantee delivery. In addition, a large portion of Ethernet networks range in speed from 100 Mbps to 1 Gbps and are not equipped to deal with the higher-bandwidth applications such as storage.

New hardware and technology standards are emerging that will enable Ethernet to overcome these limitations and become the leading candidate for consolidation.

### 10-Gigabit Ethernet

10-Gigabit Ethernet (10GbE) represents the next major speed transition for Ethernet technology. Like earlier transitions, 10GbE started as a technology reserved for backbone applications in the core of the network. New advances in optic and cabling technologies have made the price points for 10GbE attractive as a server access technology as well.

The desire for 10GbE as a server access technology is driven by advances in computer technology in the way of multisocket/multicore, larger memory capacity, and virtualization technology. In some cases, 10GbE is a requirement simply for the amount of network throughput required for a device. In other cases, however, the economics associated with multiple 1-G ports versus a single 10GbE port might drive the consolidation alone. In addition, 10GbE becoming the de facto standard for LAN-on-motherboard implementations is driving this adoption.

In addition to enabling higher transmission speeds, current 10GbE offerings provide a suite of extensions to traditional Ethernet. These extensions are standardized within IEEE 802.1 Data Center Bridging. Data Center Bridging is an umbrella referring to a collection of specific standards within IEEE 802.1, which are as follows:

- **Priority-based flow control (PFC; IEEE 802.1Qbb):** One of the basic challenges associated with I/O consolidation is that different protocols place different requirements on the underlying transport. IP traffic is designed to operate in large wide area network (WAN) environments that are global in scale, and as such applies mechanisms at higher layers to account for packet loss, for example, Transmission Control Protocol (TCP). Because of the capabilities of the upper layer protocols, underlying transports can experience packet loss and in some cases even require some loss to operate in the most efficient manner. Storage area networks (SANs), on the other hand, are typically smaller in scale than WAN environments. These protocols typically provide no guaranteed delivery mechanisms within the protocol and instead rely solely on the underlying transport to be completely lossless. Ethernet networks traditionally do not provide this lossless behavior for a number of reasons including collisions, link errors, or most commonly congestion. Congestion can be avoided with the implementation of *pause* frames. When a receiving node begins to experience congestion, it transmits a pause frame to the transmitting station, notifying it to stop sending frames for a period of time. Although this link-level pause creates a lossless link, it does so at the expense of performance for protocols equipped to deal with it in a more elegant manner. PFC solves this problem by enabling a pause frame to be sent only for a given Class of Service (CoS) value. This per-priority pause enables LAN and SAN traffic to coexist on a single link between two devices.
- **Enhanced transmission selection (ETS; IEEE 802.1Qaz):** The move to multiple 1-Gbps connections is done primarily for two reasons:
  - The aggregate throughput for a given connection exceeds 1 Gbps; this is straightforward but is not always the only reason that multiple 1-Gbps links are used.
  - To provide a separation of traffic, guaranteeing that one class of traffic will not interfere with the functionality of other classes. ETS provides a way to allocate bandwidth for each traffic class across a shared link. Each class of traffic can be guaranteed some portion of the link, and if a particular class doesn't use all the allocated bandwidth, that bandwidth can be shared with other classes.
- **Congestion notification (IEEE 802.1Qau):** Although PFC provides a mechanism for Ethernet to behave in a lossless manner, it is implemented on a hop-by-hop basis and

provides no way for multihop implementations. 802.1Qau is currently proposed as a mechanism to provide end-to-end congestion management. Through the use of backward congestion notification (BCN) and quantized congestion notification (QCN), Ethernet networks can provide dynamic rate limiting similar to what TCP provides only at Layer 2.

- **Data Center Bridging Capability Exchange Protocol extensions to LLDP (IEEE 802.1AB):** To negotiate the extensions to Ethernet on a specific connection and to ensure backward compatibility with legacy Ethernet networks, a negotiation protocol is required. Data Center Bridging Capability Exchange (DCBX) represents an extension to the industry standard Link Layer Discovery Protocol (LLDP). Using DCBX, two network devices can negotiate the support for PFC, ETS, and Congestion Management.

## Fibre Channel over Ethernet

Fibre Channel over Ethernet (FCoE) represents the latest in standards-based I/O consolidation technologies. FCoE was approved within the FC-BB-5 working group of INCITS (formerly ANSI) T11. The beauty of FCoE is in its simplicity. As the name implies, FCoE is a mechanism that takes Fibre Channel (FC) frames and encapsulates them into an Ethernet. This simplicity enables for the existing skillsets and tools to be leveraged while reaping the benefits of a Unified I/O for LAN and SAN traffic.

FCoE provides two protocols to achieve Unified I/O:

- **FCoE:** The data plane protocol that encapsulates FC frames into an Ethernet header.
- **FCoE Initialization Protocol (FIP):** A control plane protocol that manages the login/logout process to the FC fabric.

Figure 8-1 provides a visual representation of FCoE.

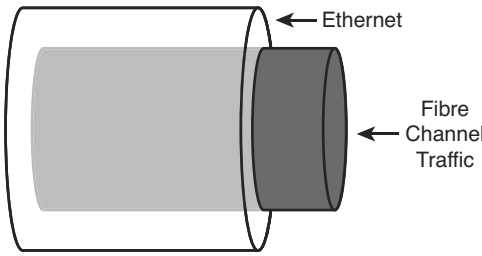


**Figure 8-1** *Fibre Channel over Ethernet*

When Fibre Channel frames are encapsulated in an Ethernet, the entire Fibre Channel frame, including the original Fibre Channel header, payload, and CRC are encapsulated in an Ethernet. Figure 8-2 depicts this.

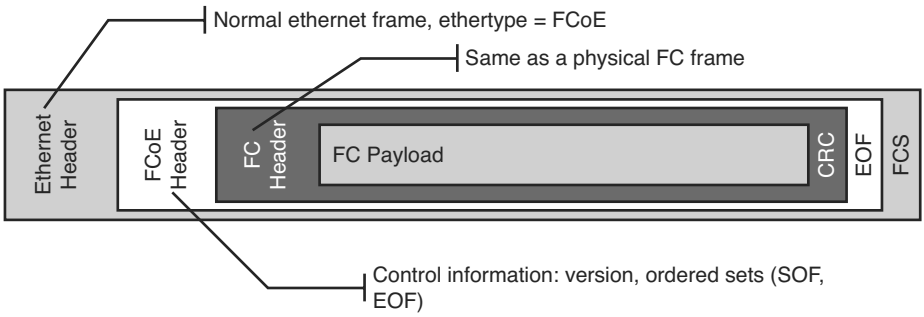


**Figure 8-2** *Fibre Channel Frame Encapsulated in an Ethernet*

The ANSI T11 specifies the frame format for FCoE. It is a standard Ethernet frame with a new EtherType of 0x8906. Also note that the new Ethernet frame has a new Frame Check Sequence (FCS) created rather than using the FCS from the Fibre Channel frame. Figure 8-3 illustrates the FCoE frame format.

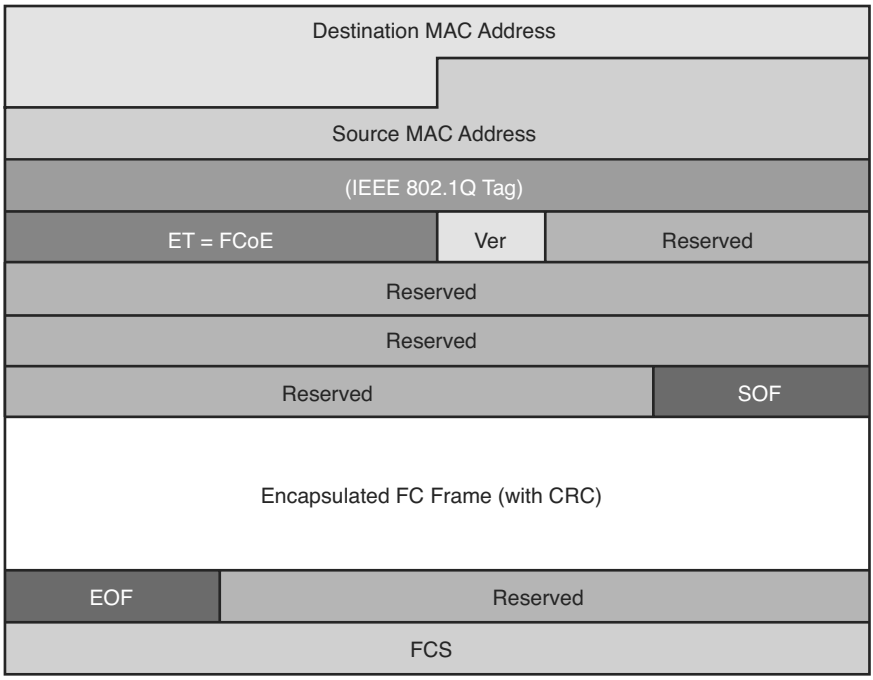


**Figure 8-3** *FcoE Frame Format*

FCoE standards also define several new port types:

- **Virtual N_Port (VN_Port):** An N_Port that operates over an Ethernet link. N_Ports, also referred to as Node Ports, are the ports on hosts or storage arrays used to connect to the FC fabric.
- **Virtual F_Port (VF_Port):** An F_port that operates over an Ethernet link. F_Ports are switch or director ports that connect to a node.
- **Virtual E_Port (VE_Port):** An E_Port that operates over an Ethernet link. E_Ports or Expansion ports are used to connect Fibre Channel switches together; when two E_Ports are connected the link, it is an interswitch link (ISL).

To facilitate using FCoE an additional control plane protocol was needed and thus FCoE Initialization Protocol (FIP) was developed. FIP helps the FCoE perform VLAN discovery, assists the device in login (FLOGI) to the fabric, and finds key resources such as Fibre Channel Forwarders (FCFs). FIP is its own Ethertype (0x8914), which makes it easier to identify on a network and helps FIP Snooping devices identify FCoE traffic. Figure 8-4 depicts where FIP starts and ends and where FCoE takes over.

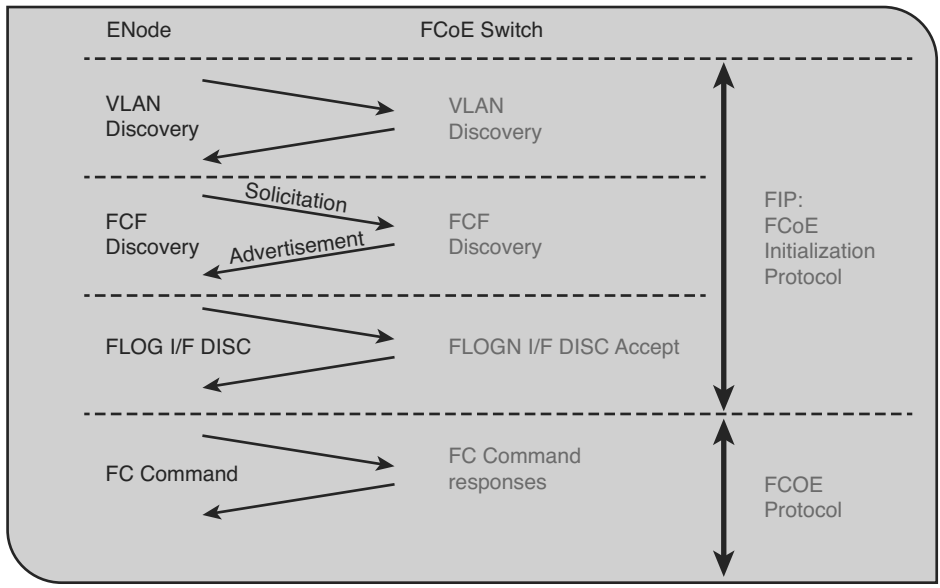


**Figure 8-4** *FIP Process*

FIP can be leveraged by native FCoE-aware devices to help provide security against concerns such as spoofing MAC addresses of end nodes and helps simpler switches, such as FIP Snooping devices, learn about FCoE traffic. This awareness can provide security and QoS mechanisms that protect FCoE traffic from other Ethernet traffic and can help ensure a good experience with FCoE without the need to have a full FCoE stack on the switch. Currently the Nexus 4000 is the only Nexus device that supports FIP snooping.

## Single-Hop Fibre Channel over Ethernet

Single-hop FCoE refers to an environment in which FCoE is enabled on one part of the network, frequently at the edge between the server and the directly connected network switch or fabric extender. In a single-hop topology the directly connected switch usually has native Fibre Channel ports which in turn uplink into an existing SAN, although you can have a complete network without any other fibre channel switches. Single-hop FCoE is the most commonly deployed FCoE model because of its double benefit of seamless interoperability into an existing SAN and the cost savings with a reduction in adapters, cabling, and optics to servers.

This reduction in cabling and adapters is accomplished through the use of a new adapter: Converged Network Adapter (CNA). CNAs have the capability to encapsulate Fibre Channel frames into Ethernet and use a 10GbE Ethernet interface to transmit both native Ethernet/IP traffic and storage traffic to the directly connected network switch or fabric extender. The CNA's drivers dictate how it appears to the underlying operating system, but in most cases it appears as a separate Ethernet card and separate Fibre Channel Host Bus Adapter (HBA).

Figure 8-5 shows how a CNA appears in Device Manager of a Microsoft Windows Server.

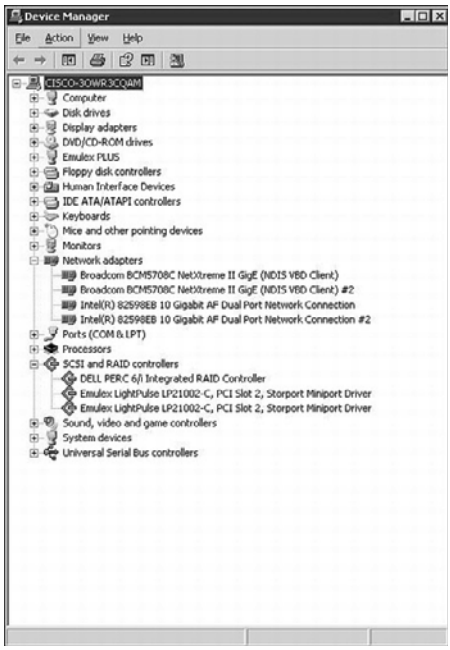


**Figure 8-5** *CNA in Device Manager*

Using CNAs in a server, a typical single-hop FCoE topology would look like Figure 8-6 where a server is connected to Nexus 5x00 switches via Ethernet interfaces. The Nexus

5x00 switches have both Ethernet and native Fibre Channel interfaces for connectivity to the rest of the network topology. The fibre channel interfaces connect to native fibre channel ports on the Cisco MDS switches, and the Ethernet interfaces connect to the Ethernet interfaces on the Nexus 7000 switches. The FCoE traffic is transported only across the first or single hop from the server to the network switch. The current implementation of the Cisco Unified Computing System (UCS) uses single-hop FCoE between the UCS blade servers and the UCS Fabric Interconnects.

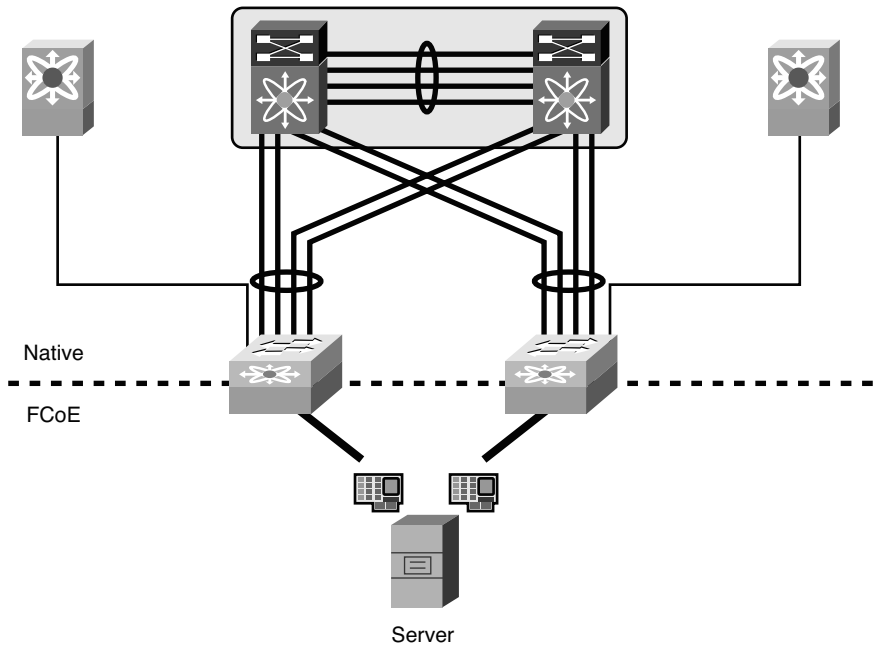


**Figure 8-6** *Single-Hop FCoE Network Topology*

## Multhop Fibre Channel over Ethernet

Building on the implementations of single-hop FCoE, multihop FCoE topologies can be created. As illustrated in Figure 8-6, native fibre channel links exist between the Nexus 5x00 and the Cisco MDS Fibre Channel switches, whereas separate Ethernet links interconnect the Nexus 5x00 and Nexus 7000. With multihop FCoE, topologies can be created where the native fibre channel links are not needed, and both fibre channel and Ethernet traffic use Ethernet interfaces.

The benefit of multihop FCoE is to simplify the topology and reduce the number of native fibre channel ports required in the network as a whole. Multihop FCoE takes the same principles of encapsulating fibre channel frames in Ethernet and uses it for switch-to-switch connections, referred to as Inter-Switch Links (ISL) in the Fibre Channel world, and uses the VE port capability in the switches.

Figure 8-7 shows a multihop FCoE topology where the server connects via CNAs to Nexus 5x00s, which in turn connect to Nexus 7000 series switches via the Ethernet carrying FCoE. The storage array is directly connected to the Nexus 7000 via FCoE as well.

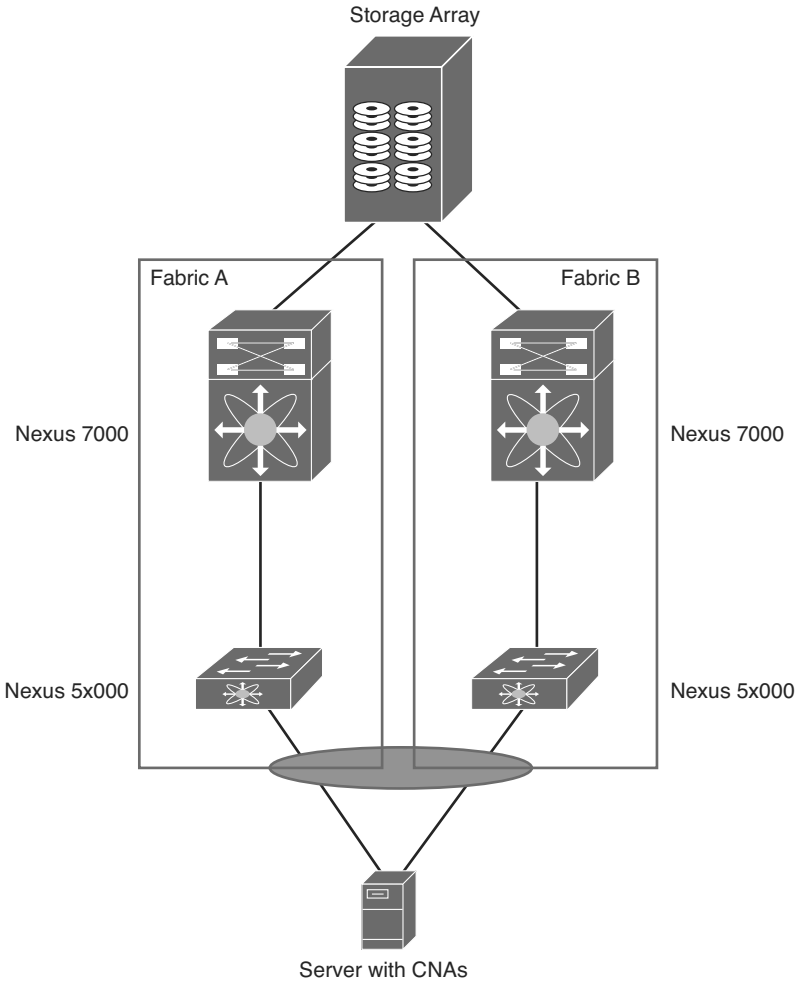


**Figure 8-7** *Multihop FCoE Topology*

## Storage VDC on Nexus 7000

One of the building blocks in a multihop FCoE topology is the storage Virtual Device Context (VDC) on the Nexus 7000. VDCs are discussed in detail in Chapter 1, "Introduction to Cisco NX-OS," and the focus in this chapter is on the Storage VDC and its use in a multihop FCoE topology. VDC is a capability of the Nexus 7000 series switches that enables a network administrator to logically virtualize the Nexus 7000 into

multiple logical devices. The storage VDC is a special VDC that enables the virtualization of storage resources on the switch. This enables in essence a "virtual MDS" inside the Nexus 7000 that participates fully in the FCoE network as a full fibre channel forwarder (FCF).

With a Storage VDC network, administrators can provide the storage team a context that allows the storage team to manage their own interfaces; configurations; and fibre channel-specific attributes such as zones, zonesets, and aliases. Figure 8-8 shows how a storage VDC can be implanted in an existing topology where single-hop FCoE was initially deployed and then multihop FCoE was added. The storage VDC was created with VE ports connecting downstream to the Nexus 7000 and VE port to the Cisco MDS fibre channel director.

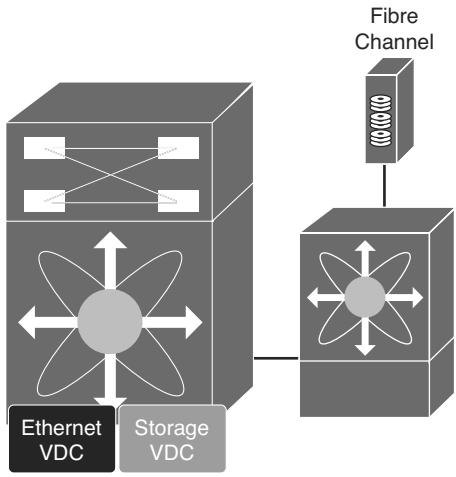


**Figure 8-8** *Storage VDC on the Nexus 7000*

The storage VDC has some requirements that are unique to this type of VDC as storage traffic is traversing it. The first requirement is that the storage VDC can support only interfaces hosted on the F1 or F2/F2e series of modules. These modules support the capability to provide lossless Ethernet and as such are only suitable for doing FCoE. The VDC allocation process in NX-OS does not allow for other types of modules to have interfaces in a VDC that has been defined as a storage VDC.

**Note** To use FCoE with the F2/F2e series module, the switch must have a Supervisor 2 or Supervisor 2E installed. FCoE on F2/F2e is not supported with the Supervisor 1 module.

In addition to requiring F1 or F2/F2e series modules, the storage VDC cannot run non-storage related protocols. You cannot enable features such as OSPF, vPC, PIM, or other Ethernet/IP protocols in the storage VDC. The only features allowed are directly related to storage. Finally, the default VDC cannot be configured as a storage VDC.

## N-Port Virtualization

The fibre channel module of the Nexus 5x00 series switch can operate in two modes:

- Fabric
- NPV (N-Port Virtualization)

When in fabric mode, the switch module operates as any switch in a fibre channel network does.

Fabric mode switches have the following characteristics:

- Unique domain ID per virtual storage area network (VSAN)
- Participation in all domain services (zoning, fabric security, Fibre Channel Identification [FCID] allocation, and so on)
- Support for interoperability modes

When the fibre channel module is configured in NPV mode, it does not operate as a typical fibre channel switch; instead leveraging a service, NPIV, on the upstream or core fibre channel switch for domain services. The switch operates in a similar fashion as an NPIV-enabled host on the fabric. The advantage NPV provides the network administrator is the control of domain IDs and points of management on a fibre channel network as it scales.

**Note** The fibre channel specification supports 239 domain IDs per VSAN; however, the reality is that many SAN vendors recommend and support a much lower number. Consult your storage vendor (Original Storage Manufacturer [OSM]) for specific scalability numbers.

Additional benefits of NPV include the capability to manage the fibre channel switch as a discrete entity for tasks such as software management and debugging the fibre channel network. NPV also enables network administrators to connect FCoE hosts to non–FCoE-enabled SANs and simplifies third-party interoperability concerns because the NPV enabled fibre channel module does not participate in domain operations or perform local switching. This enables multivendor topologies to be implemented without the restrictions the interoperability mode requires.

The fibre channel module in the Nexus 5x00 creates a new port type to the fibre channel network when in NPV mode: the NP-port. The NP-port proxies fabric login (FLOGI) requests from end stations and converts them to Fabric Discoveries (FDISC) dynamically and transparently to the end device. The result is that end systems see the NPV-enabled switch as a Fabric Port (F-port) and the upstream/core switch sees the NPV-enabled switch as an F-port as well. Figure 8-9 illustrates the port roles used in an NPV-enabled network.

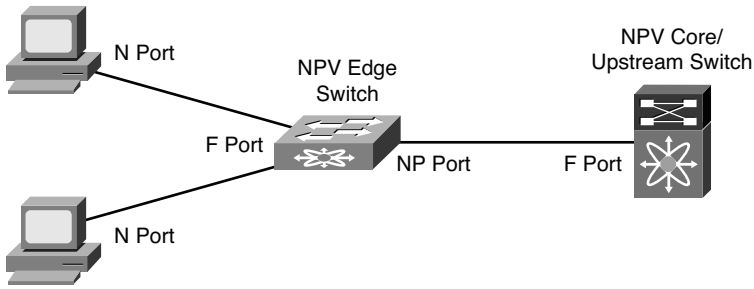


**Figure 8-9** *Port Roles in an NPV-Enabled Network*

**Note** Enabling NPV mode can cause the current configuration to be erased and the device rebooted. It is therefore recommended that NPV be enabled prior to completing any additional configuration.

## N-Port Identification Virtualization

A key component to enable the proper operation of NPV is the need for N-Port Identification Virtualization (NPIV) on the core/upstream fibre channel switch. NPIV is an industry-standard technology defined by the T11 committee as part of the Fibre Channel Link Services (FC-LS) specification and enables multiple N Port IDs or FCIDs to share a single physical N Port. Prior to NPIV, it was not possible to have a system that used multiple logins per physical port—it was a one-login-to-one-port mapping. With the increasing adoption of technologies such as virtualization, the need to allow multiple logins was created. NPIV operates by using Fabric Discovery (FDISC) requests to obtain additional FCIDs.

## FCoE NPV Mode

Building on Fibre Channel NPV mode, the Nexus 5x00 supports running in FCoE-NPV mode as well. FCoE-NPV brings similar benefits as the Fibre Channel NPV mode to a pure FCoE implementation. The switch still uses FIP snooping to determine FCoE traffic and to maintain separation and provide security with the benefits of minimized domain sprawl, simplified management, and fewer FCoE devices to manage. FCoE NPV also creates a new port type for the VNP (Virtual NPV Port). Figure 8-10 illustrates where the VNP port resides in an FCoE NPV topology.

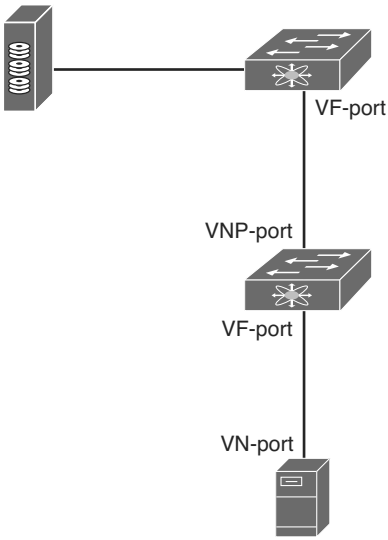


**Figure 8-10** *FCoE NPV Topology*

## Nexus 5x00 Unified Fabric Configuration

The Nexus 5x00 switches provide multiple options for using FCoE and have evolved since the platform was introduced in 2008. With the majority of Nexus 5x00 implementations used in the access layer of data center networks, it stands to reason that FCoE is predominant in the access layer. Nexus 5x00s can be used in single hop, multihop, and Fabric Extender (FEX)-based topologies using both native fibre channel interfaces, pure FCoE, or any combination. In addition, new features such as FCoE NPV and Enhanced vPC provide even more options for network administrators to choose from.

With the Nexus 5x00 switch, FCoE functionality is a licensed feature. After the license is installed, FCoE configuration can be completed.

Example 8-1 shows how to verify the installed licenses.

**Example 8-1** *Verifying FCoE License*

```
N5K-1# show lic usa
Feature                      Ins  Lic   Status Expiry Date Comments
                                 Count
--------------------------------------------------------------------------------
FCOE_NPV_PKG                  No    -   Unused             -
FM_SERVER_PKG                 No    -   Unused             -
ENTERPRISE_PKG                Yes   -   Unused Never       -
```

```
FC_FEATURES_PKG                Yes   -   Unused Never       -
VMFEX_FEATURE_PKG              No    -   Unused             -
ENHANCED_LAYER2_PKG            No    -   Unused             -
--------------------------------------------------------------------------
N5K-1#
```

Example 8-2 shows how to enable the FCoE feature.

**Example 8-2** *Enabling FCoE*

```
N5K-1# config
Enter configuration commands, one per line.  End with CNTL/Z.
N5K-1(config)# feature fcoe
FC license checked out successfully
fc_plugin extracted successfully
FC plugin loaded successfully
FCoE manager enabled successfully
N5K-1(config)#
N5K-1(config)# show license usage
Feature                      Ins  Lic   Status Expiry Date Comments
                                 Count
--------------------------------------------------------------------------
FCOE_NPV_PKG                  No    -   Unused             -
FM_SERVER_PKG                 No    -   Unused             -
ENTERPRISE_PKG                Yes   -   Unused Never       -
FC_FEATURES_PKG               Yes   -   In use Never       -
VMFEX_FEATURE_PKG             No    -   Unused             -
ENHANCED_LAYER2_PKG           No    -   Unused             -
--------------------------------------------------------------------------
N5K-1(config)#
```

Enabling NPV mode requires a write erase and reboot, as demonstrated in Example 8-3.

**Example 8-3** *Enabling NPV Mode*

```
N5K-1# config
Enter configuration commands, one per line.  End with CNTL/Z.
N5K-1(config)# show license usage
Feature                      Ins  Lic   Status Expiry Date Comments
                                 Count
--------------------------------------------------------------------------
FCOE_NPV_PKG                  No    -   Unused             -
FM_SERVER_PKG                 No    -   Unused             -
ENTERPRISE_PKG                Yes   -   Unused Never       -
FC_FEATURES_PKG               Yes   -   In use Never       -
```

```
VMFEX_FEATURE_PKG              No     -   Unused             -
ENHANCED_LAYER2_PKG            No     -   Unused             -
----------------------------------------------------------------------

N5K-1(config)# feature npv
Verify that boot variables are set and the changes are saved.
Changing to npv mode erases the current configuration and reboots the
switch in npv mode. Do you want to continue? (y/n):y
Shutdown Ports..
 writing reset reason 90,
2012 Jul 30 00:32:39 N5K-1 %$ VDC-1 %$ Jul 30 00:32:39 %KERN-0-
SYSTEM_MSG: Shutdown Ports.. - kernel
2012 Jul 30 00:32:39 N5K-1 %$ VDC-1 %$ Jul 30 00:32:39 %KERN-0-
SYSTEM_MSG:  writINIT: Sending processes the TERM signal
Sending all processes the TERM signal...
Sending all processes the KILL signal...
Unmounting filesystems...
Restarting system.
```

## Single-Hop FCoE Configuration: Nexus 5x00

Now that the switches are configured for FCoE and have NPV configured, the next step is to configure the interconnection between the upstream Fibre Channel switch and the Nexus 5x00. In this example, a Nexus 5010 is connected to a Cisco MDS 9500 Fibre Channel directory via a 4-Gb native Fibre Channel port.

The first step is to configure the MDS to use NPIV, configure the port, and add it to the correct VSAN. This enables the MDS to support multiple FLOGI on a physical interface (NPIV), and for good documentation a description is added to the physical interface before being enabled. Finally, the port is added to the correct VSAN, 10 in this example. Figure 8-11 shows the topology for this environment.

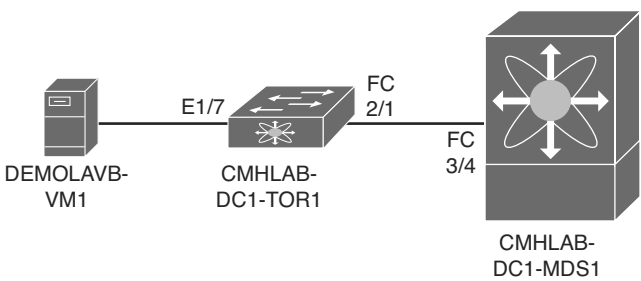


**Figure 8-11** *Single-Hop FCoE with Nexus 5x00*

Example 8-4 shows how to configure the ISL between the MDS and the Nexus 5000.

**Example 8-4** *Configuring the MDS Port*

```
CMHLAB-DC1-MDS1# config
CMHLAB-DC1-MDS1(config)# feature npiv
CMHLAB-DC1-MDS1(config)# interface fc3/4
CMHLAB-DC1-MDS1(config)# switchport description Connection to CMHLAB-DC1-TOR1 2/1
CMHLAB-DC1-MDS1(config)# switchport trunk mode off
CMHLAB-DC1-MDS1(config)# no shutdown
CMHLAB-DC1-MDS1(config)# vsan database
CMHLAB-DC1-MDS1(config-vsan-db)# vsan 10 interface fc3/4
CMHLAB-DC1-MDS1(config)# end
CMHLAB-DC1-MDS1#
CMHLAB-DC1-MDS1# show vsan membership interface fc3/4
fc3/4
        vsan:10
        allowed list:1-4078,4080-4093
CMHLAB-DC1-MDS1#
```

Next, the Nexus 5x00 needs to have a port configured for the connection to the MDS. The port is configured for the NP mode and added to the appropriate VSAN, 10 to match with the MDS configuration.

Example 8-5 shows how to configure the fibre channel uplink to the SAN core.

**Example 8-5** *Configuring FC Uplink*

```
CMHLAB-DC1-TOR1# config
Enter configuration commands, one per line.  End with CNTL/Z.
CMHLAB-DC1-TOR1(config)# int fc2/1
CMHLAB-DC1-TOR1(config-if)# switchport mode NP
CMHLAB-DC1-TOR1(config-if)# switchport description Connection to CMHLAB-DC1-MDS1
fc3/4
CMHLAB-DC1-TOR1(config-if)# no shutdown
CMHLAB-DC1-TOR1(config-if)# end
CMHLAB-DC1-TOR1#

CMHLAB-DC1-TOR1# show int fc2/1
fc2/1 is up
    Port description is Connection to CMHLAB-DC1-MDS1 fc3/4
    Hardware is Fibre Channel, SFP is short wave laser w/o OFC (SN)
    Port WWN is 20:41:00:0d:ec:a3:0d:00
    Admin port mode is NP, trunk mode is off
    snmp link state traps are enabled
    Port mode is NP
    Port vsan is 10
    Speed is 4 Gbps
```

```
    Transmit B2B Credit is 16
    Receive B2B Credit is 16
    Receive data field Size is 2112
    Beacon is turned off
    1 minute input rate 0 bits/sec, 0 bytes/sec, 0 frames/sec
    1 minute output rate 0 bits/sec, 0 bytes/sec, 0 frames/sec
      10055 frames input, 5625012 bytes
        0 discards, 0 errors
        0 CRC,  0 unknown class
        0 too long, 0 too short
      10054 frames output, 523260 bytes
        0 discards, 0 errors
      1 input OLS, 1 LRR, 0 NOS, 0 loop inits
      1 output OLS, 1 LRR, 0 NOS, 0 loop inits
    last clearing of "show interface" counters never
      16 receive B2B credit remaining
      16 transmit B2B credit remaining
      0 low priority transmit B2B credit remaining
    Interface last changed at Mon May 21 20:09:15 2012


CMHLAB-DC1-TOR1# show npv sta

npiv is enabled

disruptive load balancing is disabled

External Interfaces:
====================
  Interface:  fc2/1, VSAN:   10, FCID: 0x7c0020, State: Up

  Number of External Interfaces: 1

Server Interfaces:
==================

  Number of Server Interfaces: 0

CMHLAB-DC1-TOR1#
```

After the connection between the MDS and Nexus 5x00 is configured, the next task is to configure the FCoE VLAN to VSAN mapping, configure the Ethernet interface that connects to the server, and finally configure the Virtual Fibre Channel (VFC) interface. This process is shown in Example 8-6 and Example 8-7.

**Example 8-6** *Configuring FCoE VLAN to VSAN Mapping*

```
CMHLAB-DC1-TOR1# config
Enter configuration commands, one per line.  End with CNTL/Z.
CMHLAB-DC1-TOR1(config)# vlan 10
CMHLAB-DC1-TOR1(config-vlan)# fcoe vsan 10
CMHLAB-DC1-TOR1(config-vlan)# name FCOE-FabA
CMHLAB-DC1-TOR1(config-vlan)# end
CMHLAB-DC1-TOR1# show vlan fcoe

Original VLAN ID        Translated VSAN ID      Association State
----------------        ------------------      -----------------

      10                        10               Operational

CMHLAB-DC1-TOR1#
```

After the FCoE VLAN is configured and mapped to a fibre channel VSAN, the Ethernet port that connects to the server should be configured (refer to Example 8-7).

**Example 8-7** *Configuring the Physical and VFC Interface for FCoE*

```
CMHLAB-DC1-TOR1# config
Enter configuration commands, one per line.  End with CNTL/Z.
CMHLAB-DC1-TOR1(config)# interface Ethernet1/7
CMHLAB-DC1-TOR1(config-if)# description Connection to DEMOLAB-VM1 - Emulex CNA
CMHLAB-DC1-TOR1(config-if)# switchport mode trunk
CMHLAB-DC1-TOR1(config-if)# switchport trunk allowed vlan 10,101,301,401,701,801
CMHLAB-DC1-TOR1(config-if)# interface vfc17
CMHLAB-DC1-TOR1(config-if)# bind interface Ethernet1/7
CMHLAB-DC1-TOR1(config-if)# switchport description FCoE Interface for DEMOLAB-VM1
CMHLAB-DC1-TOR1(config-if)# no shutdown
CMHLAB-DC1-TOR1(config-if)# end
CMHLAB-DC1-TOR1# CMHLAB-DC1-TOR1# show int e1/7 trunk

--------------------------------------------------------------------------------
Port          Native  Status        Port
              Vlan                  Channel
--------------------------------------------------------------------------------
Eth1/7        1       trunking      --

--------------------------------------------------------------------------------
Port          Vlans Allowed on Trunk
--------------------------------------------------------------------------------
Eth1/7        10,101,301,401,701,801
```

```
--------------------------------------------------------------------------------
Port          Vlans Err-disabled on Trunk
--------------------------------------------------------------------------------
Eth1/7        none

--------------------------------------------------------------------------------
Port          STP Forwarding
--------------------------------------------------------------------------------
Eth1/7        10,101,301,401,701,801

--------------------------------------------------------------------------------
Port          Vlans in spanning tree forwarding state and not pruned
--------------------------------------------------------------------------------
Eth1/7        --

--------------------------------------------------------------------------------
Port          Vlans Forwarding on FabricPath
--------------------------------------------------------------------------------
CMHLAB-DC1-TOR1# show int vfc17
vfc17 is up
    Bound interface is Ethernet1/7
    Port description is FCoE Interface for DEMOLAB-VM1
    Hardware is Ethernet
    Port WWN is 20:10:00:0d:ec:a3:0d:3f
    Admin port mode is F, trunk mode is on
    snmp link state traps are enabled
    Port vsan is 10
    1 minute input rate 0 bits/sec, 0 bytes/sec, 0 frames/sec
    1 minute output rate 0 bits/sec, 0 bytes/sec, 0 frames/sec
      0 frames input, 0 bytes
        0 discards, 0 errors
      0 frames output, 0 bytes
        0 discards, 0 errors
    last clearing of "show interface" counters never

CMHLAB-DC1-TOR1#
```

## FCoE-NPV on Nexus 5x00

Configuration of the FCoE NPV mode on a Nexus 5x00 switch is similar to the configuration for the Fibre Channel NPV mode. The main difference is the configuration of an Ethernet port for the ISL and the VNP port. Figure 8-12 shows the topology used for the FCoE-NPV examples.

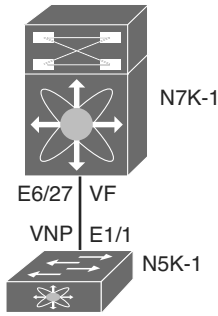


**Figure 8-12** *FCoE NPV Configuration Between a Nexus 5000 and Nexus 7000*

First, the FCoE NPV feature must be enabled, as shown in Example 8-8.

**Note** FCoE-NPV cannot be enabled if FCoE is already enabled; otherwise, the following message displays: ERROR: Cannot enable feature fcoe-npv because feature fcoe is enabled. Disable feature fcoe, reload the system, and try again.

**Example 8-8** *FCOE-NPV Feature Installation*

```
N5K-1# config
Enter configuration commands, one per line.  End with CNTL/Z.
N5K-1(config)# feature fcoe-npv
FCoE NPV license checked out successfully
fc_plugin extracted successfully
FC plugin loaded successfully
FCoE manager enabled successfully
FCoE NPV enabled on all modules successfully
N5K-1(config)# end
N5K-1#
```

After the feature is installed, the switch needs to be configured for the VSAN and VLAN mapping to associate traffic in a VLAN to a VSAN, as shown in Example 8-9.

**Example 8-9** *VLAN to VSAN Mapping*

```
N5K-1# config
Enter configuration commands, one per line.  End with CNTL/Z.
N5K-1(config)# vsan database
N5K-1(config-vsan-db)# vsan 2000 name FCOE
N5K-1(config-vsan-db)# vlan 2000
N5K-1(config-vlan)# fcoe vsan 2000
N5K-1(config-vlan)# end
```

```
N5K-1# show vlan fcoe

Original VLAN ID        Translated VSAN ID      Association State
----------------        ------------------      -----------------

      2000                      2000             Operational
N5K-1#
```

Next, the Ethernet interface and VFC interface need to be configured to carry the Ethernet VLAN and VNP mode. Example 8-10 reflects this process.

**Example 8-10** *VNP Port Configuration on the Nexus 5000*

```
N5K-1# config
Enter configuration commands, one per line.  End with CNTL/Z.
N5K-1(config)# int e1/1
N5K-1(config-if)# switchport mode trunk
N5K-1(config-if)# switchport trunk allowed vlan 2000
N5K-1(config-if)# no shut
N5K-1(config-if)# desc FCoE-NPV Connection to N7K-1 E6/27
N5K-1(config-if)# interface vfc11
N5K-1(config-if)# desc FCoE-NPV Connection to N7K-1 vfc11
N5K-1(config-if)# switchport mode np
N5K-1(config-if)# bind interface e1/1
N5K-1(config-if)# switchport trunk allowed vsan 2000
N5K-1(config-if)# no shut
N5K-1(config-if)# end
N5K-1#N5K-1# show int vfc11
vfc11 is trunking
    Bound interface is Ethernet1/1
    Port description is FCoE-NPV Connection to N7K-1 vfc11
    Hardware is Ethernet
    Port WWN is 20:0a:00:05:73:d3:14:7f
    Admin port mode is NP, trunk mode is on
    snmp link state traps are enabled
    Port mode is TNP
    Port vsan is 1
    Trunk vsans (admin allowed and active) (2000)
    Trunk vsans (up)                       (2000)
    Trunk vsans (isolated)                 ()
    Trunk vsans (initializing)             ()
    1 minute input rate 0 bits/sec, 0 bytes/sec, 0 frames/sec
    1 minute output rate 0 bits/sec, 0 bytes/sec, 0 frames/sec
      10 frames input, 1140 bytes
        0 discards, 0 errors
```

```
      7 frames output, 980 bytes
        0 discards, 0 errors
    last clearing of "show interface" counters Mon Jul 30 17:21:52 2012

    Interface last changed at Mon Jul 30 17:21:52 2012


N5K-1#
```

A similar configuration must be applied on the Nexus 7000 side of the link. The primary difference is that the VFC is configured for the VF mode and NPIV is enabled. Example 8-11 shows the commands used for the configuration and the commands to verify the correct operation.

**Example 8-11** *VFC and Ethernet Port Configuration on the Nexus 7000*

```
N7K-1-FCoE# config
Enter configuration commands, one per line.  End with CNTL/Z.
N7K-1-FCoE(config)# feature npiv
N7K-1-FCoE(config)# interface Ethernet6/27
N7K-1-FCoE(config-if)# description FCoE-NPV Connection to N5K-1 e1/1
N7K-1-FCoE(config-if)# switchport
N7K-1-FCoE(config-if)# switchport mode trunk
N7K-1-FCoE(config-if)# switchport trunk allowed vlan 2000
N7K-1-FCoE(config-if)# no shutdown
N7K-1-FCoE(config-if)#
N7K-1-FCoE(config-if)#interface vfc11
N7K-1-FCoE(config-if)#bind interface Ethernet6/27
N7K-1-FCoE(config-if)# switchport trunk allowed vsan 2000
N7K-1-FCoE(config-if)# no shutdown
N7K-1-FCoE(config-if)#end
N7K-1-FCoE#N7K09-FCoE# show int vfc11
vfc11 is trunking
    Bound interface is Ethernet6/27
    Hardware is Ethernet
    Port WWN is 20:0a:00:26:98:0f:d9:bf
    Admin port mode is F, trunk mode is on
    snmp link state traps are enabled
    Port mode is TF
    Port vsan is 1
    Speed is auto
    Trunk vsans (admin allowed and active) (2000)
    Trunk vsans (up)                       (2000)
    Trunk vsans (isolated)                 ()
    Trunk vsans (initializing)             ()
```

```
    7 fcoe in packets
    868 fcoe in octets
    11 fcoe out packets
    1324 fcoe out octets
    Interface last changed at Mon Jul 30 17:44:30 2012

N7K01-FCoE# show fcns data

VSAN 2000:
--------------------------------------------------------------------------
FCID        TYPE  PWWN                    (VENDOR)        FC4-TYPE:FEATURE
--------------------------------------------------------------------------
0x010000    N     20:0a:00:05:73:d3:14:7f (Cisco)         npv

Total number of entries = 1
N7K-1-FCoE#
```

## Nexus 7000 Unified Fabric Configuration

The Nexus 7000 provides director class support for FCoE solutions and can be used in both core and edge topologies. The platforms provides the high-availability features and capabilities such as redundant supervisors, redundant hardware components, and the inherent availability components of NX-OS, such as Storage VDCs. In-Service Software Upgrade (ISSU), Stateful Switch Over (SSO) and stateful process restart make for a solid foundation.

FCoE on the Nexus 7000 is available on the F1 (N7K-F132XP-15) and F2/F2e (N7K-F248XP-25) modules. When using FCoE on the F2/F2e module, a Supervisor 2 or Supervisor 2E must be used. FCoE on F2/F2e cannot work with a Supervisor 1 module. FCoE is also a licensed feature, and the license is bound to a module, so if FCoE will be used across multiple modules in a chassis, there must be an FCoE license installed per module.

With these requirements met, FCoE can be installed on the Nexus 7000. FCoE installation requires the system QoS policy is configured to a template that provides a no-drop class. This is configured in either the default VDC or the admin VDC if running NX_OS 6.1(1) or later. The default QoS policy uses eight drop classes and is named **default-np-8e-policy**. Example 8-12 shows the QoS classes available to be selected and shows the change to a single no-drop class. This policy matches FCoE traffic in CoS 3 and provides a lossless Ethernet transport (no drop).

**Example 8-12** *Setting the System QoS Policy*

```
N7K-1# config
Enter configuration commands, one per line.  End with CNTL/Z.
N7K-1(config)# system qos
```

```
N7K-1(config-sys-qos)# service-policy type network-qos ?
  default-nq-4e-policy  Default 4-ethernet policy (4-drop 4-nodrop CoS)
  default-nq-6e-policy  Default 6-ethernet policy (6-drop 2-nodrop CoS)
  default-nq-7e-policy  Default 7-ethernet policy (7-drop 1-nodrop CoS)
  default-nq-8e-policy  Default 8-ethernet policy (8-drop CoS)
N7K-1(config-sys-qos)# service-policy type network-qos default-nq-7e-policy
N7K-1(config-sys-qos)# end
N7K-1# show policy-map system type network-qos

  Type network-qos policy-maps
  ============================
  policy-map type network-qos default-nq-7e-policy
    class type network-qos c-nq-7e-drop
      match cos 0-2,4-7
      congestion-control tail-drop
      mtu 1500
    class type network-qos c-nq-7e-ndrop-fcoe
      match cos 3
      match protocol fcoe
      pause
      mtu 2112

N7K-1#
```

With the QoS policy mapped to a no-drop policy, the next step is to install the FCoE feature set and configure a Storage VDC. This enables FCoE across the entire chassis and then creates a VDC to be used for storage functions. Example 8-13 describes this process.

**Example 8-13** *Installing FCoE Feature Set and Creating a Storage VDC*

```
N7K-1# config
Enter configuration commands, one per line.  End with CNTL/Z.
N7K-1(config)# install feature-set fcoe
N7K-1(config)# vdc FCoE type storage
Note:  Creating VDC, one moment please ...
N7K-1(config-vdc)# show vdc

vdc_id  vdc_name   state    mac               type         lc
------- --------   -----    ---               ----         --
1       N7K-1      active   00:26:98:0f:d9:c1  Admin       None
2       Agg1       active   00:26:98:0f:d9:c2  Ethernet    f2
3       Core1      active   00:26:98:0f:d9:c3  Ethernet    m1 f1 m1xl m2xl
4       Access1    active   00:26:98:0f:d9:c4  Ethernet    m1 f1 m1xl m2xl
5       FCoE       active   00:26:98:0f:d9:c5  Storage     f1 f2
```

```
N7K-1(config-vdc)# show vdc FCoE detail

vdc id: 5
vdc name: FCoE
vdc state: active
vdc mac address: 00:26:98:0f:d9:c5
vdc ha policy: RESTART
vdc dual-sup ha policy: SWITCHOVER
vdc boot Order: 1
CPU Share: 5
CPU Share Percentage: 16%
vdc create time: Tue Jul 31 00:15:39 2012
vdc reload count: 0
vdc restart count: 0
vdc type: Storage
vdc supported linecards: f1 f2

N7K-1(config-vdc)#
```

The next step is to configure the storage VDC by allocating ports from modules, allocating a range of VLANs for use with FCoE, and then setting up the VDC for FCoE usage. Because this VDC is new, the switch prompts for a few items such as system password strength, password, and to run the setup script. When completed, basic FCoE configuration can begin. Example 8-14 walks through this process.

**Example 8-14** *Allocation of Ports and Initial VDC Configuration*

```
N7K-1# config
Enter configuration commands, one per line.  End with CNTL/Z.
N7K-1(config)# vdc fcoe
N7K-1(config-vdc)# allocate interface e6/17,e6/27,e6/29-32
Entire port-group is not present in the command. Missing ports will be included
automatically
Moving ports will cause all config associated to them in source vdc to be removed.
Are you sure you want to move the ports (y/n)?  [yes] yes
N7K-1(config-vdc)# allocate fcoe-vlan-range 2000 from vdc Access1
N7K-1(config-vdc)# end
N7K-1#
N7K-1# switchto vdc fcoe
```

```
         ---- System Admin Account Setup ----


Do you want to enforce secure password standard (yes/no) [y]: n

  Enter the password for "admin":
  Confirm the password for "admin":

         ---- Basic System Configuration Dialog VDC: 5 ----

This setup utility will guide you through the basic configuration of
the system. Setup configures only enough connectivity for management
of the system.

Please register Cisco Nexus7000 Family devices promptly with your
supplier. Failure to register may affect response times for initial
service calls. Nexus7000 devices must be registered to receive
entitled support services.

Press Enter at anytime to skip a dialog. Use ctrl-c at anytime
to skip the remaining dialogs.

Would you like to enter the basic configuration dialog (yes/no): no
Cisco Nexus Operating System (NX-OS) Software
TAC support: http://www.cisco.com/tac
Copyright (c) 2002-2012, Cisco Systems, Inc. All rights reserved.
The copyrights to certain works contained in this software are
owned by other third parties and used and distributed under
license. Certain components of this software are licensed under
the GNU General Public License (GPL) version 2.0 or the GNU
Lesser General Public License (LGPL) Version 2.1. A copy of each
such license is available at
http://www.opensource.org/licenses/gpl-2.0.php and
http://www.opensource.org/licenses/lgpl-2.1.php
N7K-1-FCoE#
N7K-1-FCoE# config
Enter configuration commands, one per line.  End with CNTL/Z.
N7K-1-FCoE(config)# feature-set fcoe
N7K-1-FCoE(config)# feature npiv
N7K-1-FCoE(config)# feature lldp
N7K-1-FCoE(config)# vsan database
N7K-1-FCoE(config-vsan-db)# vsan 2000
N7K-1-FCoE(config-vsan-db)# vlan 2000
```

```
N7K-1-FCoE(config-vlan)# fcoe
N7K-1-FCoE(config-vlan)# end
N7K-1-FCoE(config)# end
N7K-1-FCoE#
N7K-1-FCoE# show vlan fcoe

Original VLAN ID        Translated VSAN ID      Association State
----------------        ------------------      -----------------

      2000                      2000             Operational
N7K-1-FCoE#
N7K-1-FCoE(config)# end
N7K-1-FCoE#
```

With the foundation for FCoE configured, the next step is to provision connectivity. Figure 8-13 shows the topology the following examples use.

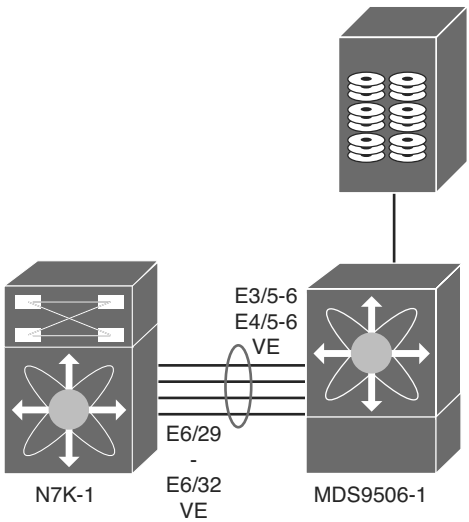


**Figure 8-13** *FCoE Topology Between Nexus 7000 and MDS*

The first step is to configure the Ethernet interfaces, add them to a port channel for additional bandwidth on the ISL and redundancy, and then configure the VFC, as shown in Example 8-15.

**Example 8-15** *Nexus 7000 to MDS Interconnection*

```
N7K-1-FCoE# config
Enter configuration commands, one per line.  End with CNTL/Z.
N7K-1-FCoE(config)# feature lacp
N7K-1-FCoE(config)# int e6/29-32
N7K-1-FCoE(config-if-range)# channel-group 258 mode active
N7K-1-FCoE(config-if-range)# int po258
N7K-1-FCoE(config-if)# desc Port Channel to MDS9506-1
N7K-1-FCoE(config-if)# switchport mode trunk
N7K-1-FCoE(config-if)# switchport trunk allowed vlan 2000
N7K-1-FCoE(config-if)# no shut
N7K-1-FCoE(config-if)# int vfc 101
N7K-1-FCoE(config-if)# switchport desc VE Port Channel to MDS9506-1
N7K-1-FCoE(config-if)# switch mode e
N7K-1-FCoE(config-if)# switch trunk allowed vsan 2000
N7K-1-FCoE(config-if)# bind interface po258
N7K-1-FCoE(config-if)# no shut
N7K-1-FCoE(config-if)# end
N7K-1-FCoE# show int vfc101
vfc101 is trunking
    Bound interface is port-channel258
    Port description is VE Port Channel to MDS9506-1
    Hardware is Ethernet
    Port WWN is 20:64:00:26:98:0f:d9:bf
    Admin port mode is E, trunk mode is on
    snmp link state traps are enabled
    Port mode is TE
    Port vsan is 1
    Speed is 40 Gbps
    Trunk vsans (admin allowed and active) (2000)
    Trunk vsans (up)                       (2000)
    Trunk vsans (isolated)                 ()
    Trunk vsans (initializing)             ()
    120677 fcoe in packets
    13910628 fcoe in octets
    120679 fcoe out packets
    10352660 fcoe out octets
    Interface last changed at Tue Jul 31 01:21:17 2012


N7K-1-FCoE#
```

For reference, Example 8-16 shows the corresponding configuration on the MDS.

**Example 8-16** *MDS FCoE Configuration*

```
MDS9506-1# show run int Eth3/5, Eth3/6, Eth4/5, Eth4/6

!Command: show running-config interface Ethernet3/5-6, Ethernet4/5-6
!Time: Tue Jul 31 01:30:57 2012

version 5.2(2a)

interface Ethernet3/5
  switchport mode trunk
  switchport trunk allowed vlan 2000
  channel-group 258 mode active
  no shutdown

interface Ethernet3/6
  switchport mode trunk
  switchport trunk allowed vlan 2000
  channel-group 258 mode active
  no shutdown

interface Ethernet4/5
  switchport mode trunk
  switchport trunk allowed vlan 2000
  channel-group 258 mode active
  no shutdown

interface Ethernet4/6
  switchport mode trunk
  switchport trunk allowed vlan 2000
  channel-group 258 mode active
  no shutdown

MDS9506-1#
MDS9506-1# show run int epo258

!Command: show running-config interface ethernet-port-channel258
!Time: Tue Jul 31 01:31:42 2012

version 5.2(2a)

interface ethernet-port-channel258
  switchport mode trunk
  switchport trunk allowed vlan 2000
```

```
Invalid interface format at '^' marker.
MDS9506-1# show run int vfc101

!Command: show running-config interface vfc101
!Time: Tue Jul 31 01:31:52 2012

version 5.2(2a)

interface vfc101
  bind interface ethernet-port-channel258
  switchport mode E
  switchport trunk allowed vsan 2000
  no shutdown

MDS9506-1# MDS9506-1# show int vfc101
vfc101 is trunking
    Bound interface is ethernet-port-channel258
    Hardware is Ethernet
    Port WWN is 20:64:00:0d:ec:35:1e:ff
    Admin port mode is E, trunk mode is on
    snmp link state traps are enabled
    Port mode is TE
    Port vsan is 1
    Speed is 40 Gbps
    Trunk vsans (admin allowed and active) (2000)
    Trunk vsans (up)                       (2000)
    Trunk vsans (isolated)                 ()
    Trunk vsans (initializing)             ()
    117696 fcoe in packets
    10091312 fcoe in octets
    117695 fcoe out packets
    13575440 fcoe out octets
    Interface last changed at Tue Jul 31 01:17:09 2012


MDS9506-1#
```

FCoE on the Nexus 7000 also supports a unique capability that enables interfaces to be shared between two VDCs. This enables the Nexus 7000 to be used in the access layer of networks where servers connect to the switch and use FCoE. A shared interface enables FCoE traffic to be segmented into the Storage VDC at the edge of the network. When an interface is shared between two VDCs, a few rules must be followed:

- Interfaces can be shared only between one Ethernet VDC and one Storage VDC.
- Interfaces to be shared must be configured as 802.1Q trunks in the Ethernet VDC.
- Interfaces may be shared only from the Ethernet VDC that allocated VLANs to the Storage VDC.
- The Ethernet VDC "owns" the physical interface. If the interface is admin down in the Ethernet VDC, it will be admin down in the Storage VDC.
- All ports that have a common ASIC must be allocated as shared interfaces. This is done in groups of two on the F1 modules and groups of four on F2/F2e modules.

**Note** If all the shared ASIC ports are not configured as trunks, allocation as shared interfaces will fail.

In Example 8-17, four ports are configured as trunks in the Ethernet VDC and then configured for shared interfaces in the Storage VDC.

**Example 8-17** *Nexus 7000 Shared Interface Allocation*

```
N7K-1# config
Enter configuration commands, one per line.  End with CNTL/Z.
N7K-1(config)# vdc fcoe
N7K-1(config-vdc)# allocate shared interface e6/17
Entire port-group is not present in the command. Missing ports will be included
automatically
Ports that share the port group of the interfaces you have specified will be affected
as well. Continue (y/n)? [yes] yes
N7K-1(config-vdc)# end
N7K-1# fcoe
Cisco Nexus Operating System (NX-OS) Software
TAC support: http://www.cisco.com/tac
Copyright (c) 2002-2012, Cisco Systems, Inc. All rights reserved.
The copyrights to certain works contained in this software are
owned by other third parties and used and distributed under
license. Certain components of this software are licensed under
the GNU General Public License (GPL) version 2.0 or the GNU
Lesser General Public License (LGPL) Version 2.1. A copy of each
such license is available at
http://www.opensource.org/licenses/gpl-2.0.php and
http://www.opensource.org/licenses/lgpl-2.1.php
N7K-1-FCoE# show int brief


--------------------------------------------------------------------------------
Interface                Status                            Speed
```

```
                                                                (Gbps)
--------------------------------------------------------------------------------
sup-fc0                  up                                  1

--------------------------------------------------------------------------------
Ethernet      VLAN    Type Mode   Status  Reason                   Speed     Por
t
Interface                                                                    Ch
#
--------------------------------------------------------------------------------
Eth6/17       1       eth  trunk  down    Administratively down      auto(D) --
Eth6/18       1       eth  trunk  down    Administratively down      auto(D) --
Eth6/19       1       eth  trunk  down    Administratively down      auto(D) --
Eth6/20       1       eth  trunk  down    Administratively down      auto(D) --
Eth6/25       --      eth  routed down    Administratively down      auto(D) --
Eth6/26       --      eth  routed down    Administratively down      auto(D) --
Eth6/27       --      eth  routed down    Administratively down      auto(D) --
Eth6/28       --      eth  routed down    SFP not inserted           auto(D) --
Eth6/29       1       eth  trunk  up      none                        10G(D) 258
Eth6/30       1       eth  trunk  up      none                        10G(D) 258
N7K-1-FCoE#
```

The next step required is to create the VFC interface for the host and specify the shared interface as the binding. This is the same syntax used on the Nexus 5x00 earlier in the chapter. Example 8-18 shows the process for the topology shown in Figure 8-14.

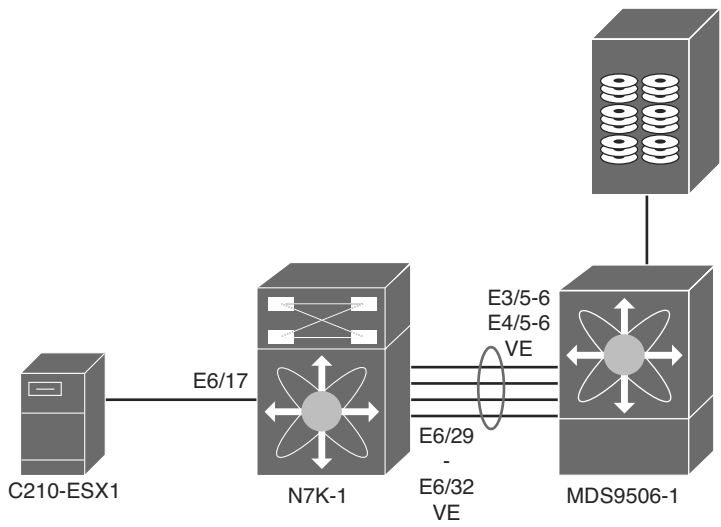


**Figure 8-14** *FCoE Topology*

**Example 8-18** *Nexus 7000 VFC Interface Creation*

```
N7K-1-FCoE# config
Enter configuration commands, one per line.  End with CNTL/Z.
N7K-1-FCoE(config)# int vfc617
N7K-1-FCoE(config-if)# bind interface ethernet 6/17
N7K-1-FCoE(config-if)# no shut
N7K-1-FCoE(config-if)# end
N7K-1-FCoE#
```

With the VFCs created and bound, VEs created to the MDS, and both storage and hosts connected to the fabric, the last step would be to configure zoning and device aliasing for the FC network. The Nexus switches can participate in zoning with a Fibre Channel network.

**Note** Nexus 5x00 when configured in the NPV or FCoE-NPV mode do not participate in zoning and aliasing because they rely on the upstream device to perform those functions.

Example 8-19 shows a device-alias, zone and zoneset creation, and activation.

**Example 8-19** *Device alias, zone, and zoneset Creation and Activation*

```
N7K-1-FCoE# config
Enter configuration commands, one per line.  End with CNTL/Z.
N7K-1-FCoE(config)# device-alias mode enhanced
N7K-1-FCoE(config)# device-alias database
N7K-1-FCoE(config-device-alias-db)#   device-alias name C210-ESX1 pwwn
20:00:e8:b7:48:4d:74:22
N7K-1-FCoE(config-device-alias-db)#   device-alias name NetApp_FAS270 pwwn
50:0a:09:81:85:75:90:88
N7K-1-FCoE(config-device-alias-db)# device-alias commit
N7K-1-FCoE(config-device-alias-db)# exit
N7K-1-FCoE(config)#zone name NetappArray vsan 2000
N7K-1-FCoE(config-zone)# member device-alias NetApp_FAS270
N7K-1-FCoE(config-zone)# member device-alias C210-ESX1
N7K-1-FCoE(config-zone)# zone name C210-ESX1 vsan 2000
N7K-1-FCoE(config-zone)# member device-alias C210-ESX1
N7K-1-FCoE(config-zone)# zoneset name VSAN2000_ZS vsan 2000
N7K-1-FCoE(config-zoneset)# member NetappArray
N7K-1-FCoE(config-zoneset)# member C210-ESX1
N7K-1-FCoE(config-zoneset)# exit
N7K-1-FCoE(config)# zoneset activate name VSAN2000_ZS vsan 2000
N7K-1-FCoE(config)# end
N7K-1-FCoE#
```

## Summary

Unified Fabric offers several benefits to customers, including

- **Lower capital expenditures:** Through the reduction of adapters, cables, and ports required within the infrastructure.
- **Lower operational expenses:** Through the reduction of adapters, cables, and ports drawing power within the data center.
- **Reduced deployment cycles:** Provides a wire-once model, where all LAN, SAN, IPC, and management traffic is available to every server without requiring additional connectivity components.
- **Higher availability:** Few adapters and fewer ports means fewer components that could fail.

By taking advantage of enhancements to traditional Ethernet technologies, and the emergence of technologies such as FCoE, customers can realize these benefits with minimal disruption to operational models. This chapter showed the basic Nexus 5x00 and Nexus 7000 configurations necessary to provide a Unified access method for LAN data traffic and SAN storage traffic. The multiple technologies that can be used with Unified Fabric such as NPV, NPIV FCOE-NPV, Storage VDCs, and shared interfaces were illustrated, and various use cases were discussed.

# Index

## NUMBERS


**6PE and MPLS (Multiprotocol Label Switching), 725**

**6VPE and MPLS (Multiprotocol Label Switching), 725**

**10-Gigabit Ethernet, 456-458**


## A


**AAA (Authentication, Authorization, and Accounting)**

accounting, 256-257

authentication, 256, 258-259, 263, 265

authorization, 256

RADIUS, 258-259

*configuration distribution, 259-264*

*configuring, 256-259*

TrustSec

*AAA configuration, 281-294*

*authentication methods, 279*

*authorization methods, 279*

**access switches, PVLAN (Private Virtual Local Area Networks) configuration, 78-79**

**accounting, 256-257**

**ACL (Access Control Lists), 302-305**

MAC ACL, 305-307

QoS, 645

VLAN ACL, 307-308

**AED (Authoritative Edge Devices) and OTV (Overlay Transport Virtualization), 680-681**

**alert groups (Smart Call Home), 424**

**Alphanumeric Process ID, OSPF**

network advertisements, 157-158

passive interfaces, 159

stub routing, 164-166

summarization, 161

**alphanumeric strings**

EIGRP instances, creating, 138

OSPF, 156

**alphanumeric tags**

EIGRP

*passive interfaces, 142*

*stub routing, 146*

*summarization, 143*

SVI, adding to EIGRP, 140-141
**analyzer (embedded), 412-414**
**Anycast-RP and RP configuration, 227, 237**
**ARP (Address Resolution Protocol)**
ARP resolution verification in FabricPath, 125-126
Dynamic ARP
*configuring, 316-317*
*Inspection Trust state, 317-320*
OTV, 700-702
synchronization, port channels and, 117
**ASM (Any Source Multicast), 225**
**Atomic configuration rollbacks, 33**
**Atomic mode (checkpoints)**
Nexus 5x00, 434
Nexus 7000, 431
**authentication, 256**
BGP, 190-192
EIGRP, 147-149
GLBP, 215-217
HSRP, 174-203
OSPF, 167-169
PIM, 229-230
RADIUS, 258-259, 263, 265
SNMPv3, 340
TrustSec, 279
VRRP, 208-209
**authorization, 256, 279**
**autonomous system numbers, EIGRP configuration, 138-139**
**Auto-RP and RP configuration, 227, 235-237**
**availability (high)**
GOLD, 358-359
*bootup diagnostics, 359*
*on-demand diagnostics, 365*
*runtime diagnostics, 360-364*
ISSU, 370-383
nonstop forwarding, 370
NX-OS, 366
processes
*modularity, 366-368*
*restarts, 368-369*
redundancy (physical), 349-350
*cooling systems, 352-355*
*EOBC, 357*
*fabric modules, 357-358*
*power supplies, 350-352*
*supervisors, 355-357, 369-370*
stateful switchovers, 368-369
Unified Fabric, 456, 488

# B

**B22HP HP-FEX, NX-OS support, 7**
**Best-effort configuration rollbacks, 33**
**Best-Effort mode mode (checkpoints)**
Nexus 5x00, 434
Nexus 7000, 431
**BGP (Border Gateway Protocol)**
authentication, 190-192
configuring, 183-185
*dotted decimal notation, 185-186*
*plain text notation, 185*
*Router ID, 186*
*routing families, 186-187*
*verifying configurations, 198*
enabling, 184-185
neighbors, 187-190

network advertisements, 194-196
overview of, 183
peer templates, 192-194
routing metrics, modifying, 197
security, 190-192
topology of, 184
**BiDir (Bidirectional shared trees), 226, 234-235, 237**
**Bootflash files, syntax of, 30**
**bootup diagnostics, 359**
**BPDU (Bridge Protocol Data Units), OTV failure isolation, 698-699**
**BPDUFilter, 95-96**
**BPDUGuard, 94-95**
**Bridge Assurance, 98-99**
**broadcast storms, traffic storm control, 323-324**
**broadcast suppression, PVLAN, 76**
**BSR (Boot Strap Routers), RP configuration, 226-227, 232-235**

# C

**case studies, Nexus migration**
design, 751
*access layer, 751*
*aggregation layer, 751*
*Core layer, 751*
design goals, 750
*availability, 751*
*flexibility, 751*
*performance, 750-751*
*scalability, 750*
existing data center envrionment, 749-750
goal of, 749
on-going maintenance windows, 788
maintenance window #1, 754
*port channel builds, 754-757*
*port channel configuration, 757-758*
*port channel verification, 758-759*
*summary, 760*
maintenance window #2, 760-761
*bandwidth configuration, 779*
*ECMP verification, 776-777*
*EIGRP, 776*
*enabling port channels, 780*
*FEX configuration, 786-787*
*HSRP routers, 777-779*
*port channel configuration, 761-763*
*port channel shut downs, 780*
*port channel verification, 765-766*
*Rapid-PVST+766*
*route verification, 780*
*routed uplink shut downs, 782*
*routing table verification, 775-776*
*STP configuration, 763-764, 766*
*STP verification, 766-768, 780-781*
*SVI address configuration, 783*
*SVI configuration, 769-774*
*SVI shut downs, 781-782*
*SVI verification, 775*
*VLAN configuration, 763-764, 766*
*vPC configuration, 764-765, 768, 784-786*
migration plan, 752
premigration steps, 752-754

summary of, 788
topology of, 760, 768, 782-784
**CE (Customer Edge) routers and MPLS (Multiprotocol Label Switching), 719**
**checkpoints**
Nexus 5x00, 434-435
*Atomic mode, 434*
*Best-Effort mode, 434*
*creating, 435-437*
*rollbacks, 437*
*Stop-at-First-Failure mode, 434*
Nexus 7000, 431-432
*Atomic mode, 431*
*Best-Effort mode, 431*
*creating, 432-433*
*rollbacks, 434*
*Stop-at-First-Failure mode, 431*
**CMP (Connectivity Management Processor) management interface, 15-18**
**community VLAN (Virtual Local Area Networks), 76-77**
**configuration files**
Atomic configuration rollbacks, 33
Best-effort configuration rollbacks, 33
rollbacks
*creating, 34-35*
*limitations of, 34*
Stop-at-first-failure configuration rollbacks, 33
Verbose mode configuration rollbacks, 33
**control plane**
MPLS, 718
OTV, 682-687
**Control VLAN (Virtual Local Area Networks), Nexus 1000V and, 492-493**
**cooling systems, redundancy, 352-355**
**CoPP (Control Plane Policing)**
configuring, 327-335
multicasts, 253
**CP (Control Processor)/Supervisor management interface, 15-16**
**cut-through switching, 60**

# D

**data packet rate limits, 335-340**
**DCNM (Data Center Network Manager), 26-28**
**debug commands, troubleshooting via, 54-56**
**debug files, syntax of, 30**
**DHCP (Dynamic Host Configuration Protocol) snooping, 313-316**
**diagnostics, GOLD, 358-359**
bootup diagnostics, 359
on-demand diagnostics, 365
runtime diagnostics, 360-364
**dispute mechanism, 98**
**dotted decimal notation, BGP configuration, 185-186**
**DVS (Distributed Virtual Switches).** *See* **Nexus 1000V**
**Dynamic ARP (Address Resolution Protocol)**
configuring, 316-317
Inspection Trust state, 317-320

# E

**edge ports (Spanning Tree Protocol), 99**
**EEE (Energy Efficient Ethernet), 447-448**
**EID (End-point Identifier) addresses, 730**
**EIGRP (Enhanced Interior Gateway Routing Protocol)**
authentication, 147-149
configuring, 137-142
*autonomous system numbers, 138-139*
*IPv4/IPv6 address families, 139*
*passive interfaces, 141-142*
*wide metrics, 141*
enabling, 137
instances, creating via
*alphanumeric strings, 138*
*numeric tags, 137-138*
operation of, 136
overview of, 135-136
redistribution, 149
*default routes, 149-151*
*Fixed Limit option, 152*
*prefix limits, 152*
*prefix list definitions, 150*
*reviewing, 153-154*
*route map definitions, 150*
*routing detail, 152-153*
*Warning option, 152*
*Withdraw option, 152-153*
security, 147-149
stub routing, 145-147
summarization, 142-145
SVI, adding via
*alphanumeric tags, 140-141*
*numeric tags, 139-140*
VRF configuration, 714-715
**embedded analyzer, 414-423**
**embedded serviceability**
checkpoints
*Nexus 5x00, 431-434*
*Nexus 7000, 431-434*
EEE, 447-448
embedded analyzer, 412-414
ERSPAN
*Nexus 5x00, 412-414*
*Nexus 1000V, 400-406*
*Nexus 7000, 406-412*
NetFlow, 437-438
*Nexus 1000V configuration, 442-444*
*Nexus 7000 configuration, 438-442*
NTP, 444-445
POAP, 448
PTP, 445-447
Python, 449-454
Smart Call Home, 424-428
*alert groups, 424*
*configuring, 424-431*
*executed commands, 424*
SPAN
*Nexus 5x00, 392-393*
*Nexus 1000V, 397-398*
*Nexus 7000, 386-392*
*overview of, 386*
**encryption, SNMPv3, 340**
**EOBC (Ethernet Out-of-Band), redundancy, 357**

**errdisable action (port security violations), 311**
**errdisable recovery, 95**
**ERSPAN (Encapsulated Remote SPAN)**
Nexus 5x00, 412-414
Nexus 1000V, 400-406
Nexus 7000, 406-412
**ESM (Extended Subnet Mode), LISP host mobility, 736-745**
**ESX vSphere hosts, adding VEM to, 528-535**
**Etherchannel**
Layer 2 configurations, 61
*Nexus 2000, 66-69*
**Ethernet, 456**
10-Gigabit Ethernet, 456-458
EEE, 447-448
FCoE, 41-42, 458-460
*Multihop FCoE, 462-463*
*Nexus 5x00 United Fabric configuration, 467-468*
FCoE NPV mode, 466
lvEth ports, 495
Single-Hop FCoE, 461-462
*Nexus 5x00 United Fabric configuration, 469-473*
VEM in Nexus 1000V, 490, 492-494
*functions of, 490-491*
*port profiles, 542-552*
*VEM additions to ESX vSphere hosts, 528-535*
*VEM installation via Installation Management Center, 519-525*
*VEM physical port classifications, 495*
*VEM supported ports, 494*
*VEM virtual port classifications, 494-495*
vEth ports, 494
**ETR (Egress Tunnel Routers), 730, 734-735**
PETR, 731
xTR, 730
**EXEC Command Mode, 12-13**
**executed commands (Smart Call Home), 424**

# F

**Fabric Extenders (Nexus 2000), 60-61**
**fabric modules, redundancy, 357-358**
**FabricPath, 2**
adjacencies, verifying, 124-125
ARP resolution, verifying, 125-126
configuring
*interfaces, 124*
*switch IDs, 122*
*VLAN, 123-124*
connectivity, testing, 125
MAC address tables, verifying, 126
Nexus 7000, enabling on, 122
overview of, 119-122
routing tables, displaying, 126-127
topology of, 122-123
vPC+,127-132
**FC uplinks, Nexus 5x00 United Fabric configuration, 470-471**
**FCoE (FibreChannel over Ethernet), 41-42, 458-460**
Multihop FCoE, 462-463

Nexus 5x00 United Fabric configuration
*enabling FCoE, 468*
*FCoE NPV mode, 466, 473-477*
*Single-Hop FCoE, 461-462, 469-473*
*verifying FCoE licenses, 467-468*
Nexus 7000 United Fabric configuration, 478-479
Nexus 7000/MDS topology, 481-484
**FEX (Fabric Extenders)**
Nexus 5x00 QoS, 668-669
Nexus 7000 QoS, 661-662
**FHRP (First Hop Redundancy Protocols), 198**
GLBP, 198
*authentication, 215-217*
*configuring, 212-214*
*enabling, 212*
*overview of, 211-212*
*priority and preempt, 213-214*
*secondary IP addresses/ subnets, 217-219*
*security, 215-217*
HSRP, 198
*authentication, 174-203*
*configuring, 199-201*
*IPv6, 204-205*
*overview of, 199*
*priority and preempt, 200-201*
*secondary IP addresses/ subnets, 203-204*
*security, 174-203*
*vPC interactions, 210-211*
OTV FHRP localization, 702-704
VRRP, 198
*authentication, 208-209*
*configuring, 205-208*
*enabling, 206*
*overview of, 205*
*priority and preempt, 207*
*secondary IP addresses/ subnets, 209*
*security, 208-209*
*vPC interactions, 210-211*
**files**
Bootflash files, 29
debug files, 29
Log files, 29
Nvram files, 29
slot0 files, 29
system files, 29
system files management, 28
*configuration files, 33-35*
*file systems, 28-33*
*operating system files, 35-36*
usb1 files, 29
usb2 files, 30
volatile files, 29
**Fixed Limit option**
EIGRP redistribution, 152
OSPF redistribution, 174
**forwarding (nonstop), 370**
**Forwarding table (MPLS), 718**
**further reading, NX-OS, 57**

# G

**GLBP (Global Load Balancing Protocol), 198**
authentication, 215-217
configuring, 212-214
enabling, 212

OTV GLBP localization, 702-704
overview of, 211-212
priority and preempt, 213-214
secondary IP addresses/subnets, 217-219
security, 215-217
topology of, 212
**Global Configuration Command Mode, 13**
**GOLD (Generic Online Diagnostics), 358-359**
bootup diagnostics, 359
on-demand diagnostics, 365
runtime diagnostics, 360-364

# H

**HA policies, 54**
**Hello authentication, PIM (Protocol Independent Multicast), 229-230**
**help**
debug commands, troubleshooting via, 54-56
MPLS, 725
show commands, troubleshooting via, 54-55
**high availability**
GOLD, 358-359
*bootup diagnostics, 359*
*on-demand diagnostics, 365*
*runtime diagnostics, 360-364*
ISSU, 370-383
nonstop forwarding, 370
NX-OS, 366
processes
*modularity, 366-368*
*restarts, 368-369*
redundancy (physical), 349-350
*cooling systems, 352-355*
*EOBC, 357*
*fabric modules, 357-358*
*power supplies, 350-352*
*supervisors, 355-357, 369-370*
stateful switchovers, 368-369
Unified Fabric, 456, 488
**hostnames, changing in VSM, 536**
**HSRP (Hot-Standby Routing Protocol), 198**
authentication, 174-203
configuring, 199-201
enabling, 199
IPv6, 204-205
OTV HSRP localization, 702-704
overview of, 199
priority and preempt, 200-201
secondary IP addresses/subnets, 203-204
security, 202-203
vPC interactions, 210-211
**hypervisor, Nexus 1000V and, 489-490**

# I

**IGMP (Internet Group Management Protocol)**
configuring
*Nexus 1000V configuration, 246-248*
*Nexus 5000 configuration, 245*
*Nexus 7000 configuration, 242-245*
enabling, 243
overview of, 241-242

snooping
*Nexus 1000V snooping, 246*
*Nexus 7000/Nexus 5000 snooping, 244-245*
*vEthernet1 snooping, 247-248*
topologies
*Nexus 1000V configuration, 247*
*Nexus 7000 configuration, 242*
**Inspection Trust state (Dynamic ARP), 317-320**
**Interface Configuration Command Modd, 13-14**
**IOS**
NX-OS comparison, 10-12
OSPF, 158
**IP addresses and PVLAN (Private Virtual Local Area Networks), 76**
**IP multicast**
CoPP, 253
IGMP, 241-242
*enabling, 243*
*Nexus 1000V configuration, 246-248*
*Nexus 1000V snooping, 246*
*Nexus 5000 configuration, 245*
*Nexus 7000 configuration, 242-245*
*Nexus 7000/Nexus 5000 snooping, 244-245*
*vEthernet1 snooping, 246*
multicast distribution trees, 222-223
overview of, 221-222
PIM, 225-226
*ASM, 225*
*BiDir, 226, 234-235, 237*
*enabling, 228*
*join policy configurations, 252-253*
*MSDP, 226, 248-250*
*Nexus 7000/Nexus 500 configuration, 227-241*
*prune policy configurations, 252-253*
*RP administrative scoping, 250-251*
*SSM, 225, 239-241*
*static RPF modes, 226, 239-241*
*topology of, 227, 237*
reverse path forwarding, 225
RP, 226-227
**IP Source Guard, 321-322**
**IPv4**
address families, configuring for EIGRP, 139
BGP neighbors, 187-190
IS-IS configuration, 180
**IPv6**
address families, configuring for EIGRP, 139
IS-IS configuration, 181
MPLS, 725
**IS-IS**
configuring, 178-183
*IPv4-enabled instances, 180*
*IPv6-enabled instances, 181*
enabling, 179
MPLS TE configuration, 724
overview of, 178
VRF configuration, 715
**isolated VLAN (Virtual Local Area Networks), 76**
**ISSU (In-Service Software Upgrades), 370-383**

**ITR (Ingress Tunnel Routers), 730, 734-735**
PITR, 730
xTR, 730

# J - K - L

**join policies in PIM configurations, 252-253**
**keychain management, 322-323**
**labels, defining in MPLS (Multiprotocol Label Switching), 718**
**LACP (Link Aggregation Control Protocol), 104-107**
**Layer 2**
cut-through switching, 60
enabling, 77
FabricPath
*adjacency verification, 124-125*
*ARP resolution verification, 125-126*
*connectivity tests, 125*
*enabling on Nexus 7000, 122*
*interface configuration, 124*
*MAC address table verification, 126*
*overview of, 119-122*
*routing table verification, 126-127*
*switch ID configuration, 122*
*topology of, 122-123*
*VLAN configuration, 123-124*
*vPC+127-132*
MAC addresses
*checking table consistency, 71*
*clearing tables, 70*
*displaying tables, 70*
Nexus 2000
*Etherchannel, 61, 66-69*
*Fabric Extenders, 60-61*
*port-channel forwarding, 61, 66-69*
*static pinning, 61-66*
*switching, 61*
overview of, 59-60
port channels
*ARP synchronization, 117*
*flow control, 107-108*
*LACP physical port assignments, 104-107*
*load balancing, 103-104*
*Nexus 7000 port channel forwarding, 69-71*
*overview of, 103*
*static physical port assignments, 104-105*
*verifying load distribution, 108-109*
*vPC, 109-117*
port profiles, 102-103
PVLAN
*broadcast suppression, 76*
*community VLAN, 76-77*
*configuring access switches, 78-79*
*creating SVI, 78*
*defining, 78*
*enabling, 77*
*IP addresses, 76*
*isolated VLAN, 76*
*overview of, 76-77*
*primary VLAN, 76*
*secondary VLAN, 76-77*
*security, 76*

*uses for, 76*
*verifying configurations, 80*
standard hosts, configuring, 101
store-and-forward switching, 60
STP, 80
*BPDUFilter, 95-96*
*BPDUGuard, 94-95*
*Bridge Assurance, 98-99*
*defining default port type, 99-100*
*dispute mechanism, 98*
*edge ports, 99*
*errdisable recovery, 95*
*LoopGuard, 97-98*
*MST, 81, 87-91*
*network ports, 99*
*normal ports, 99*
*port costs, 91-94*
*port priority, 94*
*Rapid-PVST, 80-87*
*RootGuard, 96-97*
*timers, 84-87*
*TrunkFast, 100*
*virtualization hosts, 100-103*
*VLAN, 81*
trunk ports, configuring, 100-101
UDLD, 118-119
virtualization hosts, linking to, 101
VLAN
*adding ports, 73*
*adding/removing from trunks, 74*
*assigning memberships, 73-74*
*configuring, 72*
*configuring trunk interfaces, 74*
*creating, 72*
*creating multiple VLAN, 72*
*displaying internal VLAN, 71-72*
*overview of, 71*
*Spanning Tree Protocol, 81*
*verifying configurations, 74-76*
*VTP, 72-73*
**Layer 3, 179**
BGP
*authentication, 190-192*
*configuring, 183-187*
*enabling, 184-185*
*neighbors, 187-190*
*network advertisements, 194-196*
*overview of, 183*
*peer templates, 192-194*
*routing metric modifications, 197*
*security, 190-192*
*verifying configurations, 198*
EIGRP
*authentication, 147-149*
*configuring, 137-142*
*enabling, 137*
*instance creation, 137-138*
*operation of, 136*
*overview of, 135-136*
*redistribution, 149-154*
*security, 147-149*
*stub routing, 145-147*
*summarization, 142-145*
*SVI additions, 139-141*
GLBP, 198
*authentication, 215-217*
*configuring, 212-214*
*enabling, 212*
*overview of, 211-212*

*priority and preempt, 213-214*
*secondary IP addresses/ subnets, 217-219*
*security, 215-217*
HSRP, 198
*authentication, 174-203*
*configuring, 199-201*
*IPv6, 204-205*
*overview of, 199*
*priority and preempt, 200-201*
*secondary IP addresses/ subnets, 203-204*
*security, 202-203*
*vPC interactions, 210-211*
IS-IS
*configuring, 178-183*
*enabling, 179*
*overview of, 178*
MPLS
*6PE, 725*
*6VPE, 725*
*CE, 719*
*control plane, 718*
*device relationships, 719*
*enabling, 721*
*Forwarding table, 718*
*high availability, 725-726*
*IPv6, 725*
*labels, 718*
*Layer 3 VPN, 718, 720-723*
*LDP, 719, 721-723*
*LSP, 719*
*LSR, 719*
*managing, 725*
*Nexus hardware requirements, 726-727*
*NX-OS licensing, 726-727*
*overview of, 717-718*
*P, 719*
*PE, 719*
*Quality of Service, 718, 723*
*RD, 719*
*RSVP, 719*
*RT, 719*
*Traffic Engineering, 718, 723-725*
*troubleshooting, 725*
*VRF-based CE-PE BGP configuration, 723*
Nexus 1000V VSM installation, 536-542
OSPF
*authentication, 167-169*
*configuring, 154-160*
*OSPFv3 configuration, 177-178*
*overview of, 154*
*redistribution, 169-177*
*security, 167-169*
*stub routing, 163-167*
*summarization, 160-163*
VRF
*EIGRP configuration, 714-715*
*Interface and VRF configuration, 712*
*IS-IS configuration, 715*
*MPLS, VRF-based CE-PE BGP configuration, 723*
*Nexus hardware requirements, 726-727*
*NX-OS licensing, 726-727*
*operational commands, 713*
*OSPF configuration, 714*
*overview of, 709*
*predefined VRF, 710-713*

*routing table isolation, 712-713*
*VRF-capable components, 710*
*VRF-Lite, 713-717*
VRRP, 198
*authentication, 208-209*
*configuring, 205-208*
*enabling, 206*
*overview of, 205*
*priority and preempt, 207*
*secondary IP addresses/ subnets, 209*
*security, 208-209*
*vPC interactions, 210-211*
**LDP (Label Distribution Protocol), MPLS, OSPF configuration, 722**
**LDP (Label Distribution Protocol) and MPLS (Multiprotocol Label Switching), 719, 722**
enabling LDP, 721-722
OSPF configuration, 721-722
**licensing NX-OS, 7-10**
**LinkSec, TrustSec configurations, 294-302**
**LISP (Locator/ID Separator Protocol), 730, 746-747**
communication sequence of events, 733
components of, 731
control plane sequence of events, 732
data plane, 733-735
deploying, 746
EID addresses, 730
ESM, 736-745
ETR, 730, 734-735
hardware requirements, 731-732
host mobility, 736-745
ITR, 730, 734-735
LISP/non-LISP site communications, 735-736
MR, 730
MS, 730
OTV, 707
overview of, 729-730
PETR, 731
PITR, 730
RLOC, 736, 738
RLOC addresses, 730
software requirements, 731-732
xTR, 730
**Log files, syntax of, 30**
**loop prevention, Nexus 1000V and, 495**
**LoopGuard, 97-98**
**Loose Unicast RPF mode (unicast RPF), 326**
**LSP (Label Switching Path) and MPLS (Multiprotocol Label Switching), 719**
**LSR (Label Switching Routers) and MPLS (Multiprotocol Label Switching), 719**
**lvEth (local virtual Ethernet) ports, VEM in Nexus 1000V, 495**

# M

**MAC ACL (Access Control Lists), 305-307**
**MAC addresses**
FabricPath, verifying MAC address tables, 126
Layer 2
*checking table consistency, 71*
*clearing tables, 70*
*displaying tables, 70*
OTV Edge Device, 689

**machine managers (virtual).** *See* **hypervisor**
**management interfaces, 14-28**
**MDS 9000, NX-OS support, 7**
**MDS ports, Nexus 5x00 United Fabric configuration, 470**
**memberships (VLAN), assigning, 73-74**
**MGMT0 management interface, 15**
**migration case study (Nexus)**
design, 751
*access layer, 751*
*aggregation layer, 751*
*Core layer, 751*
design goals, 750
*availability, 751*
*flexibility, 751*
*performance, 750-751*
*scalability, 750*
existing data center envrionment, 749-750
goal of, 749
on-going maintenance windows, 788
maintenance window #1, 754
*port channel builds, 754-757*
*port channel configuration, 757-758*
*port channel verification, 758-759*
*summary, 760*
maintenance window #2, 760-761
*bandwidth configuration, 779*
*ECMP verification, 776-777*
*EIGRP, 776*
*enabling port channels, 780*
*FEX configuration, 786-787*
*HSRP routers, 777-779*
*port channel configuration, 761-763*
*port channel shut downs, 780*
*port channel verification, 765-766*
*Rapid-PVST+766*
*route verification, 780*
*routed uplink shut downs, 782*
*routing table verification, 775-776*
*STP configuration, 763-764, 766*
*STP verification, 766-768, 780-781*
*SVI address configuration, 783*
*SVI configuration, 769-774*
*SVI shut downs, 781-782*
*SVI verification, 775*
*VLAN configuration, 763-764, 766*
*vPC configuration, 764-765, 768, 784-786*
migration plan, 752
premigration steps, 752-754
summary of, 788
topology of, 760, 768, 782-784
**modularity (processes), 366-368**
**MPLS (Multiprotocol Label Switching), 723**
6PE, 725
6VPE, 725
CE, 719
control plane, 718
deploying, 719
device relationships, 719
enabling, 721
Forwarding table, 718

high availability, 725-726
IPv6, 725
labels, 718
Layer 3 VPN, 718, 720-723
LDP
*defining, 719*
*enabling, 721-722*
*operational commands, 722*
*OSPF configuration, 721-722*
LSP, 719
LSR, 719
managing, 725
Nexus hardware requirements, 726-727
NX-OS licensing, 726-727
overview of, 717-718
P, 719
PE, 719
Quality of Service, 718, 723
RD, 719
RSVP, 719
RT, 719
Traffic Engineering, 718, 723-725
*enabling, 724*
*IS-IS configuration, 724*
*OSPF configuration, 725*
troubleshooting, 725
VRF-based CE-PE BGP configuration, 723
**MQC (Modular Quality of Service CLI), 644-645**
**MR (Map-Resolvers), 730**
**MS (Map-Servers), 730**
**MSDP (Multicast Source Discovery Protocol), 226**
Nexus 7000 configuration, 248-250
topology of, 248
**MST (Multiple Spanning Tree), 81, 87-91**
**MTS (Message and Transaction Services), high availability, 366**
**multicast, 241-242**
CoPP, 253
IGMP, 241-242
*enabling, 243*
*Nexus 1000V configuration, 246-248*
*Nexus 1000V snooping, 246*
*Nexus 5000 configuration, 245*
*Nexus 7000 configuration, 242-245*
*Nexus 7000/Nexus 5000 snooping, 244-245*
*vEthernet1 snooping, 246*
multicast distribution trees, 222-223
multicast storms, 324
overview of, 221-222
PIM, 225-226
*ASM, 225*
*BiDir, 226, 234-235, 237*
*enabling, 228*
*join policy configurations, 252-253*
*MSDP, 226, 248-250*
*Nexus 7000/Nexus 500 configuration, 227-241*
*prune policy configurations, 252-253*
*RP administrative scoping, 250-251*
*SSM, 225, 239-241*
*static RPF modes, 226, 239-241*
*topology of, 227, 237*

reverse path forwarding, 225
RP, 226-227
**Multihop FCoE (FibreChannel over Ethernet), 462-463**

# N

**NAM (Network Analysis Module)**
deploying as VSB on Nexus 1010, 641-642
installing, 630-640
overview of, 629
topology of, 629
**NDAC (Network Device Admission Control) and TrustSec, 282-285**
**NetFlow, 437-438**
Nexus 1000V configuration, 442-444
Nexus 7000 configuration, 438-442
**network advertisements**
BGP, 194-196
OSPF configuration
*Alphanumeric Process ID, 157-158*
*Numeric Process ID, 157*
**network ports (Spanning Tree Protocol), 99**
**network-qos policies, 646**
Nexus 5x00, 664-667
Nexus 7000, 648-650
**Nexus 5x00**
checkpoints, 434-435
*Atomic mode, 434*
*Best-Effort mode, 434*
*creating, 435-437*
*rollbacks, 437*
*Stop-at-First-Failure mode, 434*
ERSPAN, 412-414
QoS, 663, 674
*FEX, 668-669*
*forwarding architecture, 663-664*
*network-qos policies, 664-667*
*queuing policies, 667-668*
SPAN, 392-393
*session limits, 393-397*
United Fabric configuration, 467
*enabling FCoE, 468*
*enabling NPV mode, 468-469*
*FCoE NPV configuration, 469-473*
*Single-Hop FCoE configuration, 469-473*
*verifying FCoE licenses, 467-468*
**Nexus 1000V**
architecture of, 490-491
benefits of, 493
Control VLAN, 492-493
ERSPAN, 400-406
hypervisor, 489-490
IGMP configuration, 246-248
Installation Management Center, 510-519-525
loop prevention, 495
NAM
*deploying as VSB on Nexus 1010, 641-642*
*installing, 630-640*
*overview of, 629*
*topology of, 629*
NetFlow configuration, 442-444
overview of, 490-493
Packet VLAN, 493

port profiles, 542-543
*characteristics of, 543-545*
*creating on VSM, 545-546*
*mobility of, 549-550*
*QoS policies, 550-552*
*states of, 543*
*verifying on VSM, 546-548*
QoS, 670, 674
*classification in, 670-673*
*forwarding architecture, 670*
scalability numbers, 494
SPAN, 397-398
*configuring, 398-400*
*session limits, 398*
topology of, 492
VEM, 490, 492-494
*functions of, 490-491*
*installation via Installation Management Center, 519-525*
*physical port classifications, 495*
*port profiles, 542-552*
*supported ports, 494*
*VEM additions to ESX vSphere hosts, 528-535*
*virtual port classifications, 494-495*
VM, 493
VMware and VMNIC, 495
VNMC, 552-553
*installing, 553-562*
*PA configuration, 570-571*
*VM-Manager, 564-569*
VSG, 571-573
VSM, 490, 492-493
*changing hostnames, 536*
*installing, 496-541*
*Layer 3 control, 536-542*
*PA configuration via VNMC, 570-571*
*port profile creation, 545-546*
*port profile verification, 546-548*
*Telnet servers, 536*
*uplink profile creation, 526-528*
vSphere, 489-490
VXLAN
*deploying, 604-629*
*overview of, 602-604*
*topology of, 603*

**Nexus 1000v**
NX-OS licensing, 9
NX-OS support, 6

**Nexus 1010**
Nexus 1000V NAM deployments as VSB, 641-642
VNMC, VSG tenant creation, 579-602
VSG installation, 574-577
*tenant creation in VNMC, 579-602*
*verifying VNMC registration, 578*
*VNMC PA configuration on VSM, 577-578*
VSM
*PA configuration via VNMC, 577-578*
*verifying VNMC registration, 578*

**Nexus 2000**
Fabric Extenders, 60-61
FEX
*Nexus 5x00 QoS, 668-669*
*NX-OS support, 6*

Layer 2
*Etherchannel, 61, 66-69*
*port-channel forwarding, 61, 66-69*
*static pinning, 61-66*
Layer 2 switching, 61
NX-OS licensing, 9
**Nexus 2148, NX-OS support, 6**
**Nexus 2224, NX-OS support, 6**
**Nexus 2232TM, NX-OS support, 6**
**Nexus 2232TM-E, NX-OS support, 6**
**Nexus 2232TP, NX-OS support, 6**
**Nexus 2248, NX-OS support, 6**
**Nexus 2248TP-E, NX-OS support, 6**
**Nexus 3000, NX-OS licensing, 8**
**Nexus 3016, NX-OS support, 5**
**Nexus 3048, NX-OS support, 5**
**Nexus 3064, NX-OS support, 5**
**Nexus 3548, NX-OS support, 6**
**Nexus 4000, NX-OS support, 7**
**Nexus 5000**
IGMP configuration, 245
NX-OS support, 4-5
PIM configuration, 227-241
**Nexus 5010**
NX-OS support, 4
unsupported NX-OS features, 5
**Nexus 5020**
NX-OS support, 4
unsupported NX-OS features, 5
**Nexus 5500, NX-OS licensing, 8**
**Nexus 5548P, NX-OS support, 4**
**Nexus 5548UP, NX-OS support, 4-5**
**Nexus 5596UP, NX-OS support, 5**
**Nexus 7000**
checkpoints, 431-432
*Atomic mode, 431*
*Best-Effort mode, 431*
*creating, 432-433*
*rollbacks, 434*
*Stop-at-First-Failure mode, 431*
ERSPAN, 406-412
FabricPath, enabling on Nexus 7000, 122
IGMP configuration, 242-245
NetFlow configuration, 438-442
NX-OS licensing, 7-8
NX-OS support, 3-4
PIM configuration, 227-241
port channels
*Layer 2 port-channel forwarding, 69-71*
*load balancing options, 103-104*
QoS, 646, 674
*FEX, 661-662*
*forwarding architecture, 646-648*
*network-qos policies, 648-650*
*queuing policies, 650-661*
*VDC, 663*
*VQI, 647-648*
SPAN, 386-387
*configuring, 387-392*
*session limits, 387*
TrustSec configuration, 285-288
United Fabric configuration, 477, 484-485, 487
*FCoE installation, 478-479*

*MDS FCoE configuration, 482-484*
*Nexus 7000 shared interface allocation, 485-486*
*Nexus 7000/MDS interconnection, 481-482*
*QoS policies, 477-478*
*Storage VDC, 478-479*
*VDC configuration, 479-481*
*VFC interface creation, 486-487*
VDC
*communicating between, 42-43*
*components shared between, 38*
*configuring, 43-46*
*default VDC, 38-39*
*HA policies, 54*
*interface allocation, 46-53*
*logical segmentation on, 38-39*
*module types, 39-40*
*monitoring resources, 37-38*
*non-default VDC, 39*
*overview of, -37*
*shared interfaces, 41-42*
*storage VDC, 41*
*system resource allocation, 53-54*
**Nexus 7004, NX-OS support, 3-4**
**Nexus 7009, NX-OS support, 3**
**Nexus 7010, NX-OS support, 3**
**Nexus 7018, NX-OS support, 3**
**Nexus migration case study**
design, 751
*access layer, 751*
*aggregation layer, 751*
*Core layer, 751*
design goals, 750
*availability, 751*
*flexibility, 751*
*performance, 750-751*
*scalability, 750*
existing data center envrionment, 749-750
goal of, 749
on-going maintenance windows, 788
maintenance window #1, 754
*port channel builds, 754-757*
*port channel configuration, 757-758*
*port channel verification, 758-759*
*summary, 760*
maintenance window #2, 760-761
*bandwidth configuration, 779*
*ECMP verification, 776-777*
*EIGRP, 776*
*enabling port channels, 780*
*FEX configuration, 786-787*
*HSRP routers, 777-779*
*port channel configuration, 761-763*
*port channel shut downs, 781*
*port channel verification, 765-766*
*Rapid-PVST+766*
*route verification, 780*
*routed uplink shut downs, 782*
*routing table verification, 775-776*
*STP configuration, 763-764, 766*
*STP verification, 766-768, 780-781*

*SVI address configuration, 783*
*SVI configuration, 769-774*
*SVI shut downs, 781-782*
*SVI verification, 775*
*VLAN configuration, 763-764, 766*
*vPC configuration, 764-765, 768, 784-786*
migration plan, 752
premigration steps, 752-754
summary of, 788
topology of, 760, 768, 782-784
**nonstop forwarding, 370**
**normal ports (Spanning Tree Protocol), 99**
**NPIV (N-Port Identification Virtualization), 466**
**NPV (N-Port Virtualization), 465-466**
Nexus 5x00 United Fabric configuration, 468-469
NPIV, 466, 473-477
**NTP (Network Time Protocol), 444-445**
**Numeric Process ID, OSPF**
configuring, 155-156
network advertisements, 157
passive interfaces, 159
stub routing, 163, 165
summarization, 160-161
**numeric tags**
EIGRP
*instance creation, 137-138*
*passive interfaces, 141-142*
*stub routing, 146*
*summarization, 143*
SVI, adding to EIGRP, 139-140
**Nvram files, syntax of, 29**
**NX-OS**
advantages of, 1-2
B22HP HP-FEX support, 7
CMP management interface, 15-18
continuous system operations, 2
CP/Supervisor management interface, 15-16
DCNM, 26-28
EXEC Command Mode, 12-13
FabricPath, 2
further reading, 57
Global Configuration Command Mode, 13
high availability, 366
Interface Configuration Command Modd, 13-14
IOS comparison, 10-12
licensing, 7-10
*MPLS, 726-727*
*VRF, 726-727*
management interfaces, 14-28
MDS 9000 support, 7
MGMT0 management interface, 15
Nexus 1000v support, 6
Nexus 2000 FEX support, 6
Nexus 3000 support, 5-6
Nexus 4000 support, 7
Nexus 5000 support, 4-5
Nexus 7000 support, 3-4
OSPF, 158
OTV, 2
PSS, 2
security, 2
SNMP management interface, 15, 23-26

SSH management interface, 15, 19-21
supported platforms, 3-7
Telnet management interface, 15, 18-19
UCS support, 7
user modes, 12-14
VDC, 2
vPC, 2
XML management interface, 15, 21-22

# O

**on-demand diagnostics, 365**
**operating system files, 35-36**
**OSPF (Open Shortest Path First), 172, 725**
authentication, 167-169
configuring, 154-155
*alphanumeric strings, 156*
*network advertisements, 157-158*
*Numeric Process ID, 155-156*
*passive interfaces, 159-160*
*Router ID, 156-157*
enabling, 155
IOS versus NX-OS, 158
LDP configuration as IGP in MPLS, 721-722
MPLS TE configuration, 725
OSPFv3 configuration, 177-178
overview of, 154
redistribution, 169-170
*default routes, 171-172*
*Fixed Limit option, 174*
*prefix list definitions, 170, 172*
*redistributed route limits, 174-175*
*route map definitions, 170, 172*
*Warning option, 174*
*Withdraw option, 174*
security, 167-169
stub routing, 163-167
summarization, 160-163
topology of, 155, 170
VRF configuration, 714
**OTV (Overlay Transport Virtualization), 2, 707**
adjacency server, 692-695
AED, 680-681
ARP, 700-702
control plane, 682-687
data plane, 695-697
*encapsulation, 696*
*multicast traffic, 697-698*
*unicast traffic, 698*
dual adjacency, 680
failure isolation, 698
*broadcast traffic handling, 699*
*STP isolation, 698-699*
*unknown unicast handling, 699*
FHRP localization, 702-704
GLBP localization, 702-704
HSRP localization, 702-704
inbound path optimization, 705-707
internal interfaces, 677-678
join interface, 678
LISP, 707
multicast-enabled transport, 687-691
multihoming, 700
OTV Edge Device, 677, 689
OTV site-id, 679-680

OTV site-VLAN, 679
overlay adjacency, 680
overlay interface, 679
overview of, 675-676
QoS, 698
site adjacency, 680
topology of, 676
unicast-enabled transport, 691-695
VRRP localization, 702-704

# P

**P (Provider routers) and MPLS (Multiprotocol Label Switching), 719**
**PA (Policy-Agent)**
Nexus 1000V VSM configuration, 570-571
Nexus 1010 VSM configuration, 577-578
**packet (data) rate limits, 335-340**
**Packet VLAN, Nexus 1000V and, 493**
**PE (Provider Edge) routers and MPLS (Multiprotocol Label Switching), 719**
**peer templates (BGP), 192-194**
**PETR (Proxy ETR), 731**
**physical redundancy, 349-350**
cooling systems, 352-355
EOBC, 357
fabric modules, 357-358
power supplies, 350-352
supervisors, 355-357, 369-370
**physical topology, 56**
**PIM (Protocol Independent Multicast), 225-226**
ASM, 225
authentication, 229-230
BiDir, 226, 234-235, 237
enabling, 228
join policy configurations, 252-253
MSDP, 226
*enabling, 248-249*
*Nexus 7000 configuration, 248-250*
Nexus 7000/Nexus 5000 configuration, 226-230
*Anycast-RP configuration, 237*
*Auto-RP configuration, 235-237*
*BiDir configuration, 234-235*
*BSR configuration, 230-232, 237*
*Hello authentication, 229-230*
*static RP configuration, 230-232*
prune policy configurations, 252-253
RP administrative scoping, 250-251
security, 229-230
SSM, 225, 239-241
static RPF modes, 226, 239-241
topology of, 227
**PITR (Proxy ITR), 730**
**plain text notation, BGP configuration, 185**
**POAP (Power On Auto-Provisioning), 448**
**port channels**
ARP synchronization, 117
flow control, 107-108
forwarding, Layer 2 configurations, 61, 66-69, 71
load balancing, 103-104
load distribution, verifying, 108-109

overview of, 103
physical port assignments
*LACP, 104-107*
*static configurations, 104-105*
vPC, 109-116
*vPC-Peer Gateways, 116*
*vPC-Peer Switches, 116-117*
**port profiles**
Layer 2 configurations, 102-103
Nexus 1000V profiles, 542-543
*characteristics of, 543-545*
*creating on VSM, 545-546*
*mobility of, 549-550*
*QoS policies, 550-552*
*states of, 543*
*verifying on VSM, 546-548*
**ports**
security
*configuring, 308-311*
*violations, 311-313*
STP
*cost configuration, 91-94*
*defining default port type, 99-100*
*edge ports, 99*
*network ports, 99*
*normal ports, 99*
*priority, 94*
VLAN, adding to, 73
**power supplies, redundancy, 350-352**
**processes**
modularity, 366-368
restarts, 368-369
**protect action (port security violations), 311**
**prune policies, PIM configurations, 252-253**
**PSS (Persistent Storage Service), 2, 366**
**PTP (Precision Time Protocol), 445-447**
**PVLAN (Private Virtual Local Area Networks).** *See also* **VLAN (Virtual Local Area Networks)**
access switches, configuring, 78-79
broadcast suppression, 76
configuring, 77
defining, 78
enabling, 77
IP addresses, 76
overview of, 76-77
security, 76
SVI, creating, 78
uses for, 76
verifying configurations, 80
VLAN in
*community VLAN, 76-77*
*isolated VLAN, 76*
*primary VLAN, 76*
*secondary VLAN, 76-77*
**Python, 449-454**

# Q

**QoS (Quality of Service), 674**
ACL, 645
class maps, 645
classification matches, 645-646
MPLS, 718, 723
MQC, 644-645
network-qos policies, 646
*Nexus 5x00, 664-667*
*Nexus 7000, 648-650*

Nexus 5x00, 663, 674
*FEX, 668-669*
*forwarding architecture, 663-664*
*network-qos policies, 664-667*
*queuing policies, 667-668*
Nexus 1000V, 670, 674
*classification in, 670-673*
*forwarding architecture, 670*
Nexus 7000, 646, 674
*FEX, 661-662*
*forwarding architecture, 646-648*
*network-qos policies, 648-650*
*queuing policies, 650-661*
*United Fabric configuration, 477-478*
*VDC, 663*
*VQI, 647-648*
OTV, 698
overview of, 643
port profiles in Nexus 1000V, 550-552

**queuing policies**
Nexus 5x00 QoS, 667-668
Nexus 7000 QoS, 650-661


# R


**RADIUS (Remote Access Dial-In User Service)**
configuration distribution, 259-264
configuring, 256-259
TrustSec and RADIUS server host configuration, 281-282

**Rapid-PVST (Per-VLAN Spanning Tree), 80-87**

**rate limits (data packets), 335-340**

**RD (Route Distinguishers) and MPLS (Multiprotocol Label Switching), 719**

**redistribution**
EIGRP, 149-154
OSPF, 169-177

**redundancy (physical), 349-350**
cooling systems, 352-355
EOBC, 357
fabric modules, 357-358
power supplies, 350-352
supervisors, 355-357, 369-370

**restarts (processes), 368-369**

**restrict action (port security violations), 311**

**RLOC (Route Locator) addresses, 730, 736, 738**

**rollbacks (configuration)**
Atomic configuration rollbacks, 33
Best-effort configuration rollbacks, 33
checkpoints and
*Nexus 5x00, 437*
*Nexus 7000, 434*
creating, 34-35
limitations of, 34
Stop-at-first-failure configuration rollbacks, 33
Verbose mode configuration rollbacks, 33

**RootGuard, 96-97**

**Router ID**
BGP configuration, 186
OSPF configuration, 156-157

**routers and MPLS (Multiprotocol Label Switching)**
CE, 719
LSR, 719

P, 719
PE, 719
**routing table verification (FabricPath), 126-127**
**RP (Rendezvous Points)**
configuring
*Anycast-RP, 227, 237*
*Auto-RP, 227, 235-237*
*BSR, 226-227, 232-235*
*static RP, 226, 230-232*
IP multicasts and, 226-227
**RPF (Reverse Path Forwarding), IP multicasting, 225-226, 239-241**
**RSVP (Resource Reservation Protocol) and MPLS (Multiprotocol Label Switching), 719**
**RT (Route Targets) and MPLS (Multiprotocol Label Switching), 719**
**runtime diagnostics, 360-364**

# S

**security**
ACL, 302-305
*MAC ACL, 305-307*
*VLAN ACL, 307-308*
BGP, 190-192
CoPP, 327-335
DHCP snooping, 313-316
Dynamic ARP
*configuring, 316-317*
*Inspection Trust state, 317-320*
EIGRP, 147-149
GLBP, 215-217
HSRP, 174-203
IP Source Guard, 321-322
keychain management, 322-323
LinkSec and TrustSec configuration, 294-302
NX-OS, 2
OSPF, 167-169
PIM, 229-230
ports
*configuring, 308-311*
*violations, 311-313*
PVLAN, 76
RADIUS
*configuration distribution, 259-264*
*configuring, 256-259*
rate limits (data packets), 335-340
security network topologies, 255-257
SNMPv3, 340-347
SSH, 275-278
TACACS+
*configuration distribution, 267*
*configuring, 266-275*
traffic storm control, 323-325
TrustSec
*AAA configuration, 281-294*
*authentication, 279*
*authorization, 279*
*configuring, 278-*
*LinkSec configuration, 294-302*
*NDAC definition, 282-285*
*Nexus 7000 configuration, 285-288*
*overview of, 278-279*
*RADIUS server host configuration, 281-282*
*SGACL creation, 292-294*
*SGT assignments, 288-290*

*SGT mapping, 290-292*
*topology of, 279*
unicast RPF, 325-327
VRRP, 208-209
VSG, 571-602
**serviceability (embedded)**
checkpoints
*Nexus 5x00, 431-434*
*Nexus 7000, 431-434*
EEE, 447-448
embedded analyzer, 412-414
ERSPAN
*Nexus 5x00, 412-414*
*Nexus 1000V, 400-406*
*Nexus 7000, 406-412*
NetFlow, 437-438
*Nexus 1000V configuration, 442-444*
*Nexus 7000 configuration, 438-442*
NTP, 444-445
POAP, 448
PTP, 444-445
Python, 449-454
Smart Call Home, 424-428
*alert groups, 424*
*configuring, 424-431*
*executed commands, 424*
SPAN
*Nexus 5x00, 392-393*
*Nexus 1000V, 397-398*
*Nexus 7000, 386-392*
*overview of, 386*
**SGACL (Security Group Access Control Lists), TrustSec configuration, 292-294**
**SGT (Security Group Tags), TrustSec configurations**
SGT assignments, 288-290
SGT mapping, 290-292
**show commands, troubleshooting via, 54-55**
**shutdown action (port security violations), 311**
**Single-Hop FCoE (FiberChannel over Ethernet), 461-462, 469-473**
**slot0 files, syntax of, 30**
**Smart Call Home, 424-428**
alert groups, 424
configuring, 424-431
executed commands, 424
**SNMP (Simple Network Management Protocol) management interface, 15**
**SNMP management interface, 23-26**
**SNMPv3 (Simple Network Management Protocol version 3), 340-347**
**snooping**
DHCP snooping, 313-316
IGMP
*Nexus 1000V snooping, 246*
*Nexus 7000/Nexus 5000 snooping, 244-245*
*vEthernet1 snooping, 246*
**software, upgrading via ISSU (In-Service Software Upgrades), 370-383**
**SPAN (Switch Port Analyzer)**
Nexus 5x00, 392-393
*configuring, 393-397*
*session limits, 393*
Nexus 1000V, 397-398
*configuring, 398-400*
*session limits, 398*

Nexus 7000, 386-387
*configuring, 387-392*
*session limits, 387*
overview of, 386
**SSH (Secure Shell)**
configuring, 275-278
management interface, 15, 19-21
**SSM (Source Specific Multicast), 225, 239-241**
**standard hosts, Layer 2 configurations, 101**
**stateful switchovers, 369-370**
**static pinning, 61-66**
**static RP and RP configurations, 226, 230-232**
**static RPF modes, IP multicasting and, 239-241**
**static RPF (Reverse Path Forwarding), IP multicasting and, 226**
**Stop-at-first-failure configuration rollbacks, 33**
**Stop-at-First-Failure mode (checkpoints)**
Nexus 5x00, 434
Nexus 7000, 431
**storage**
PSS (Persistent Storage Service), 2
storage VDC, 41
**Storage VDC (Virtual Device Context), 463-464, 478-479**
**store-and-forward switching, 60**
**STP (Spanning Tree Protocol)**
BPDU and OTV failure isolation, 698-699
BPDUFilter, 95-96
BPDUGuard, 94-95
Bridge Assurance, 98-99
dispute mechanism, 98
errdisable recovery, 95
LoopGuard, 97-98
MST, 81, 87-91
overview of, 80
port costs, configuring, 91-94
port priority, configuring, 94
ports
*defining default port type, 99-100*
*edge ports, 99*
*network ports, 99*
*normal ports, 99*
Rapid-PVST, 80-87
RootGuard, 96-97
timers, 84-87
TrunkFast, 100
virtualization hosts, 100-103
VLAN, 81
**Strict Unicast RPF mode (unicast RPF), 325**
**stub routing**
EIGRP, 145-147
OSPF, 163-167
**summarization and EIGRP (Enhanced Interior Gateway Routing Protocol), 142-145**
**supervisors, redundancy, 355-357, 369-370**
**SVI (Switched Virtual Interfaces)**
EIGRP, adding to, 139-141
GLBP configuration, 213
HSRP configuration, 200
PVLAN, creating for, 78
VRRP configuration, 206-207
**switch IDs, configuring via FabricPath, 122**

**switching**
cut-through switching, 60
Layer 2 switching, Nexus 2000 and, 61
store-and-forward switching, 60
**switchovers (stateful), 369-370**
**system files**
management, 28
*configuration files, 33-35*
*file systems, 28-33*
*operating system files, 35-36*
syntax of, 30
**System Manager (NX-OS), 368-369**
high availability, 366
process restarts, 368-369
stateful switchovers, 368-369

# T

**TACACS+ (Terminal Access Controller Access-Control System+)**
configuration distribution, 267
configuring, 266-267
*global TACACS+ keys, 268*
*TACACS+ server groups, 269-270*
*TACACS+ server hosts, 268-269*
*TACACS+ server keys, 268*
*TACACS+ source interface, 270-275*
enabling, 266-267
**Telnet management interface, 15, 18-19**
**Telnet servers, VSM and, 536**
**templates (peer) and BGP (Border Gateway Protocol), 192-194**
**timers (Spanning Tree Protocol), 84-87**
**topologies, 56, 237**
BGP, 184
FabricPath, 122-123
FCoE, Nexus 7000/MDS topology, 481
GLBP, 212
IGMP
*Nexus 1000V configuration, 247*
*Nexus 7000 configuration, 242*
MSDP, 248
OSPF, 155, 170
OTV, 676
OTV adjacency server, 692-693
physical topology, 56
PIM, 227, 237
security network topologies, 255-257
TrustSec, 279
VRRP, 205
**Traffic Engineering and MPLS (Multiprotocol Label Switching), 718, 723-725**
enabling in, 724
IS-IS configuration, 724
OSPF configuration, 725
**traffic storm control, 323-325**
**troubleshooting, 54**
debug commands, 54-56
MPLS, 725
show commands, 54-55
**trunk ports, Layer 2 configurations, 100-101**
**TrustSec**
authentication, 279
authorization, 279

configuring, 278-302
*AAA configuration, 281-294*
*NDAC definition, 282-285*
*Nexus 7000 configuration, 285-288*
*RADIUS server host configuration, 281-282*
*SGACL creation, 292-294*
*SGT assignments, 288-290*
*SGT mapping, 290-292*
LinkSec configuration, 294-302
overview of, 278-279
topology of, 279

# U

**UCS (Unified Computing Systems), NX-OS support, 7**
**UDLD (Unilateral Link Detection), 118-119**
**unicast**
unicast RPF, 325-327
unicast storms and traffic storm control, 324-325
**Unified Fabric**
benefits of, 456, 488
Ethernet, 456
*10-Gigabit Ethernet, 456-458*
*FCoE, 458-460, 467-468*
*FCoE NPV mode, 466, 473-477*
*Multihop FCoE, 462-463*
*Single-Hop FCoE, 461-462, 469-473*
Nexus 5x00 configuration, 467
*enabling FCoE, 468*
*enabling NPV mode, 468-469*
*FCoE NPV configuration, 469-473*
*Single-Hop FCoE configuration, 469-473*
*verifying FCoE licenses, 467-468*
Nexus 7000 configuration, 477, 484-485, 487
*FCoE installation, 478-479*
*MDS FCoE configuration, 482-484*
*Nexus 7000 shared interface allocation, 485-486*
*Nexus 7000/MDS interconnection, 481-482*
*QoS policies, 477-478*
*Storage VDC, 478-479*
*VDC configuration, 479-481*
*VFC interface creation, 486-487*
NPV, 465-466
*FCoE NPV mode, 466, 473-477*
*NPIV, 466*
overview of, 455-456
storage VDC, 463-464
**upgrades, ISSU (In-Service Software Upgrades), 370-383**
**uplink profiles, creating for Nexus 1000V VSM, 526-528**
**usb1 files, syntax of, 29**
**usb2 files, syntax of, 30**
**user modes, 12-14**

# V

**VDC (Virtual Device Contexts), 2, 663**
communicating between, 42-43
components shared between, 38
configuring, 43-46

default VDC, 38-39
HA policies, 54
interface allocation, 46-53
module types, 39-40
Nexus 7000
*logical segmentation on, 38-39*
*QoS, 663*
*Storage VDC, 478-479*
*VDC configuration, 479-481*
non-default VDC, 39
overview of, 37
resources, monitoring, 37-38
shared interfaces, 41-42
storage VDC, 41, 463-464
system resource allocation, 53-54
**VEM (Virtual Ethernet Module)**
Nexus 1000V, 490, 492-494
*port profiles, 542-552*
*VEM additions to ESX vSphere hosts, 528-535*
*VEM functions in, 490-491*
*VEM installation via Installation Management Center, 519-525*
*VEM physical port classifications, 495*
*VEM supported ports, 494*
*VEM virtual port classifications, 494-495*
**Verbose mode configuration rollbacks, 33**
**vEth (virtual Ethernet) ports, VEM in Nexus 1000V, 494**
**vEthernet1, IGMP configuration, 246-248**
**VFC interface**
Nexus 5x00 United Fabric configuration
*FCoE NPV configuration, 476-477*
*Single-Hop FCoE configuration, 472-473*
Nexus 7000 United Fabric configuration, 486-487
**virtual machine managers.** *See* **hypervisor**
**Virtual NIC, VEM in Nexus 1000V, 494**
**virtualization hosts**
linking to, 101
STP, 100-103
**VLAN (Virtual Local Area Networks).** *See also* **PVLAN (Private Virtual Local Area Networks)**
community VLAN, 76-77
configurations, verifying, 74-76
configuring, 72
creating, 72
FabricPath, configuring VLAN via, 123-124
internal VLAN, displaying, 71-72
isolated VLAN, 76
memberships, assigning, 73-74
multiple VLAN, creating, 72
Nexus 5x00 United Fabric configuration
*FCoE NPV configuration, 474-475*
*Single-Hop FCoE configuration, 471-472*
OTV site-VLAN, 679
overview of, 71
ports, adding, 73
PVLAN
*community VLAN, 76-77*
*isolated VLAN, 76*

*primary VLAN, 76*
*secondary VLAN, 76-77*
STP, 81
trunk interfaces, configuring, 74
trunks, adding/removing from, 74
VTP, 72-73
**VLAN ACL (Access Control Lists), 307-308**
**VM (Virtual Machines) and Nexus 1000V, 493**
**vmknic (virtual kernel NIC), VEM in Nexus 1000V, 494**
**VM-Manager and Nexus 1000V VNMC, 564-569**
**VMNIC (Virtual Machine NIC) and VMware, 495**
**VMware, 490, 491**
VMNIC, 495
VSM uplink profile creation, 526-528
**vNIC (virtual NIC), VEM in Nexus 1000V, 494**
**VNMC (Virtual Network Management Center), Nexus 1000V and, 552-553**
installing, 553-562
PA configuration, 570-571
VM-Manager, 564-569
VSG tenant creation, 579-602
**VNP ports, Nexus 5x00 United Fabric configuration, 475-476**
**volatile files, syntax of, 30**
**vPC (Virtual Port Channels), 2, 109-116**
HSRP/VRRP interactions, 210-211
vPC-Peer Gateways, 116
vPC-Peer Switches, 116-117
**vPC+ (Virtual Port Channel+), 127-132**
**VPN (Virtual Private Networks), Layer 3 VPN and MPLS, 718, 720-723**
**VQI (Virtual Queuing Index), Nexus 7000 QoS, 647-648**
**VRF (Virtual Routing and Forwarding)**
EIGRP configuration, 714-715
Interface and VRF configuration, 712
IS-IS configuration, 715
MPLS, VRF-based CE-PE BGP configuration, 723
Nexus hardware requirements, 726-727
NX-OS licensing, 726-727
operational commands, 713
OSPF configuration, 714
overview of, 709
predefined VRF, 710-713
routing table isolation, 712-713
VRF-capable components, 710
VRF-Lite, 713-717
*route import/export functionality, 716*
*route import/export verification, 716-717*
**VRRP (Virtual Router Redundancy Protocol), 198**
authentication, 208-209
configuring, 205-208
enabling, 206
OTV VRRP localization, 702-704
overview of, 205
priority and preempt, 207
secondary IP addresses/subnets, 209
security, 208-209

topology of, 205
vPC interactions, 210-211
**VSAN (Virtual Storage Area Network) mapping, Nexus 5x00 United Fabric configuration**
FCoE NPV configuration, 474-475
Single-Hop FCoE configuration, 471-472
**VSB (Virtual Service Blades), Nexus 1000V deployments, 497-509, 641-642**
**VSG (Virtual Security Gateways)**
Nexus 1000V configuration, 571-573
Nexus 1010 installation, 574-577
*tenant creation in VNMC, 579-602*
*verifying VNMC registration, 578*
*VNMC PA configuration on VSM, 577-578*
**VSM (Virtual Supervisor Mode)**
Nexus 1000V, 490, 492-493
*changing hostnames, 536*
*installing on, 496-541*
*Layer 3 control, 536-542*
*PA configuration via VNMC, 570-571*
*port profile creation, 545-546*
*port profile verification, 546-548*
*Telnet servers, 536*
*uplink profile creation, 526-528*
Nexus 1010
*PA configuration via VNMC, 577-578*
*verifying VNMC registration, 578*
**vSphere and Nexus 1000V, 489-490, 528-535**
**vswif, VEM in Nexus 1000V, 494**
**VTP (VLAN Trunking Protocol), 72-73**
**VXLAN (Virtual Extensible LAN)**
deploying, 604-629
overview of, 602-604
topology of, 603

# W

**Warning option**
EIGRP redistribution, 152
OSPF redistribution, 174
**web resources, NX-OS, 57**
**Withdraw option, 174**
EIGRP redistribution, 152-153
OSPF redistribution, 174

# X - Y - Z

**XML management interface, 15, 21-22**
**xTR (ITR and ETR), 730**